EVO Max Series

4T/4N Aircraft

User Manual

V1.1.3 2024.01

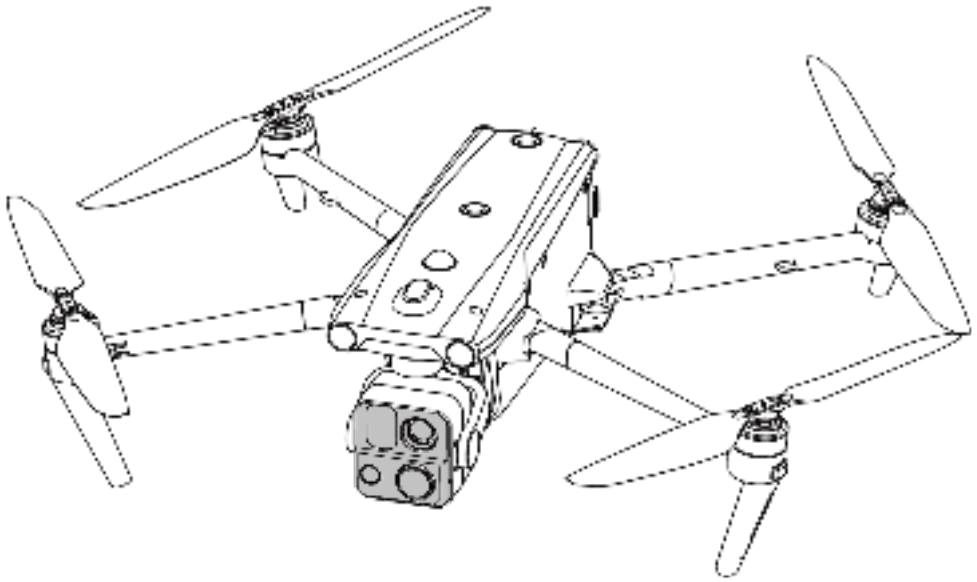

AUTEL ROBOTICS

Copyright

This manual is copyrighted by Autel Robotics Co., Ltd. with all rights reserved. Without prior written authorization from the company, no person (or entity) may copy, scan, store, distribute, reproduce, sell, transfer, or modify any part or all of this manual in any form for personal use or use by others. Users should only refer to this manual and the content thereof as instructions to operate this product. This manual should not be used for other purposes.

Trademark Information

EVO Max™, Autel Enterprise™ and AUTEL® trademarks are registered trademarks of the Autel Robotics Co., Ltd. (hereinafter referred to as "Autel Robotics") in China or other countries/regions.

Reading Assistance

- This manual is an electronic PDF document that supports high-resolution printing.
- If you are using a PDF reader such as Adobe Reader or Microsoft Edge to read this manual, press Ctrl+F on Windows or Command+F on Mac to search for keywords.
- View the content structure in the table of contents and click on titles to navigate to the respective pages.

Update Log

Version	Date	Revisions
V1.1	2023.09	● Added introduction of EVO Max 4N model. ● Updated usage descriptions related to remote controller firmware (V1.6.0.3) and Autel Enterprise App (V1.4.1). ● Optimized document structure.
V1.1.1	2023.11	● Added detail information of the image transmission frequency. ● Added warnings for some chapters. ● Adjustment of the light language of the rear arm light during flight.
V1.1.2	2023.12	● Added detail information of the Wi-Fi frequency. ● Optimized description of Geo-fencing section.
V1.1.3	2024.01	● Added UGZ import function.

Thank you for purchasing and using the EVO Max series aircraft (hereinafter referred to as "aircraft") from Autel Robotics. Relevant user documents for this product are provided in electronic form along with the product, and download links are provided in this manual. Before using this product, please carefully read the operation steps and precautions in this manual, so that you can quickly understand the characteristics and usage methods of this product, so as to ensure safe use of the product.

	● The final interpretation right of this document and all related documents of this product belongs to Autel Robotics. ● This document is subject to update without notice.

Legend

The following symbols are used in this manual to draw the user's attention to important safety and operating information. Please be sure to follow the notes or requirements under each symbol, otherwise, it may affect the safety features of the product or cause personal injury.

Symbol	Definition
	Warning: Alerts to a potentially hazardous situation.
	Important: Reminds the user to pay attention to a point.
	Remarks: Supplementary information.
	Tips: Quick tips to get the best possible experience.

Read Before Your First Flight

To ensure safe use of the EVO Max series aircraft, Autel Robotics provides you with the following documents and relevant tutorial videos. Please scan the QR codes in this manual or use the provided links to access them.

1. “Packing List”: A list of everything that should be included in the packing box.
2. “Disclaimer and Safety Operation Guidelines”: Instructions on how to operate the product safely.
3. “Battery Safety Operation Guidelines”: Basic knowledge and safe handling of smart batteries.
4. “Quick Start Guide”: Basic knowledge of operating the product.
5. “User Manual”: A guide for you to master the operation method of the product proficiently.
6. “Maintenance Manual”: Instructions on how to maintain the aircraft and its accessories.

We recommend that you first check the completeness of the items in the packing box according to the “Packing List”, then read the “Disclaimer and Safety Operation Guidelines” carefully, and then watch the tutorial videos and read the "Quick Start Guide" to get a basic understanding of how to use the product.

Before your first flight, please read the "Battery Safety Operation Guidelines" and "User Manual" carefully to get a more detailed understanding of how to use the product.

Getting Tutorial videos, User Documents, and Relevant Software

You can scan the QR codes below or visit the following links to access tutorial videos and user documents or download relevant software for the EVO Max series aircraft:

To watch tutorial videos, please visit:
https://www.autelrobotics.com/videos/evo-max-series/.

To download resources, please visit:
https://manuals.autelrobotics.com/?dir=/EVO%20Max%20Series/Aircraft/.

Manual Guide

This manual contains 7 main chapters and 2 appendices. You can refer to the corresponding chapters for the desired information.

Chapter	Chapter Overview
Product Overview	This chapter introduces the main functions of the EVO Max series aircraft.
Flight Safety	This chapter introduces the flight environment, wireless communication requirements, and important flight safety features of the aircraft.
Aircraft	This chapter introduces the functions and usage of various components of the EVO Max series aircraft.
Remote Controller	This chapter introduces the functions of the Autel Smart Controller V3, including how to use the controller to operate the aircraft.
Smart Battery	This chapter introduces how to use, store, and maintain the smart battery of the aircraft.
Autel Enterprise App	This chapter introduces the interfaces and functions of the Autel Enterprise App.
Firmware Updates and	This chapter introduces how to perform firmware updates and

Maintenance	routine maintenance for the aircraft.
Appendix A	This chapter provides technical specifications for the EVO Max series aircraft and its accessories.
Appendix B	EU Declaration of Conformity for EVO Max Series Aircraft.

Disclaimer

To ensure the safe and successful operation of this product, please read and fully understand all user documents listed above and strictly follow the operating instructions and steps described in this manual. Store the aircraft and its accessories out of the reach of children and pets. If you do not abide by the Safety Operation Guidelines, Autel Robotics shall not be responsible for any product damage or personal and property loss during use, and shall not provide any warranty service. Never modify the product using any incompatible component or in any way that does not conform to the official instructions of Autel Robotics. Please make sure that the operations you perform do not endanger the personal or property safety of yourself or those around you. By starting to use this product, you agree that you have read and accepted all terms related to this product. You undertake to be responsible for your own actions and all consequences arising therefrom. You undertake to use this product only for legitimate purposes and agree to these terms and any relevant policies or guidelines that Autel Robotics may establish.

Important

- When unboxing the product for the first time, carefully check the aircraft and other accessories included in the packing box according to the “Packing List”.
- The content of this manual will be updated from time to time based on the function updates of the product.
- Please be aware that in the absence of flight logs from the Autel Enterprise App, Autel Robotics may not be able to analyze the causes of product damage or accidents and provide after-sales service.

Warning

- Using the EVO Max series aircraft of Autel Robotics involves certain safety risks. Do not allow minors to operate the aircraft.

Warranty Policy

Autel Robotics guarantees users who purchase products through its official authorized channels that:

- Under normal use, the Autel Robotics products you purchase will be free from material and workmanship defects during the warranty period.
- If you can provide a valid purchase receipt, the warranty period of this product is calculated from the midnight of the next day after you receive the product.
- If you cannot provide a valid purchase receipt, the warranty start date will be postponed by 90 days from the date of manufacture indicated by the product's serial number or as defined by Autel Robotics.

Tip

- For the after-sales policy of the product, please visit: https://www.autelrobotics.com/service/policy/.

After-Sales Support

If you have any questions or concerns about our products, please contact Autel Robotics customer support:
Hotline: (844) MY AUTEL or (844) 692-88 35

Maintenance Service

If your equipment needs to be inspected or repaired, please contact Autel Robotics through the following methods:

- Email after-sale@autelrobotics.com or support@autelrobotics.com.
- Call Autel Robotics customer support at (844) MY AUTEL or (844) 692-88 35.
- Contact dealers authorized by Autel Robotics.

Important

- All data stored on the product may be erased during the repair process. To avoid data loss, please back up important files in your aircraft or remote controller before the product is under warranty.

Table of Contents

Chapter 1 Product Overview 1

1.1 Introduction 1

1.2 What's In The Rugged Case 2

1.3 Product Acceptance Checklist 3

1.4 UAS Introduction 4

Chapter 2 Flight Safety 7

2.1 Legal Use Notice 7

2.1.1 Chinese Mainland 7

2.1.2 The U.S. 8

2.1.3 The EU 8

2.1.4 Other Countries and Regions 8

2.2 Flight Operation Guidelines 9

2.3 Flight Environment Requirements 9

2.4 Wireless Communication Requirements 10

2.5 Declaration of Maximum Take-off Mass 10

2.6 Obstacle Avoidance System 11

2.6.1 Introduction to Visual Sensing System and Millimeter-Wave Radar Sensing System 11

2.6.2 Observation Range 12

2.6.3 Visual Positioning Function 13

2.6.4 Visual Obstacle Avoidance Function 14

2.6.5 Precautions for Using Obstacle Avoidance Systems 15

2.7 Auto-return 15

2.7.1 Manual Auto-return Activation 16

2.7.2 Low Battery Auto-return Activation 16

2.7.3 Behavior-based Auto-return Activation 17

2.7.4 Auto-return Mechanism 17

2.7.5 Auto-return Obstacle Avoidance Process 18

2.7.6 Landing Protection Function 19

2.8 Rebuilding the C2 Link 19

2.9 Flight Restrictions and Unlocking Restricted Zones 20

2.9.1 Geofencing System 20

2.9.2 Restricted Zones 21

2.9.3 UGZ Import 23

2.9.4 Unlocking No-Fly Zones 23

2.10 Altitude and Distance Limits 24

2.11 Aircraft Calibration 25

2.11.1 Compass Calibration 25

2.11.2 IMU Calibration 27
2.11.3 Gimbal Calibration 29
2.12 Emergency Stop Propellers During Flight 30
2.13 Mid-flight Sensing 31
2.14 Direct Remote Identification 31
2.15 Standard Flight Operation Process 32
2.15.1 Pre-Flight Checklist 32
2.15.2 Basic Flight Process 32

Chapter 3 Aircraft 34

3.1 Aircraft Activation 34
3.2 Aircraft Components 34
3.3 Propeller 38
3.3.1 Replacing Propellers 38
3.3.2 Storing Propellers 39
3.4 Arm Light 40
3.5 Strobe 41
3.6 Auxiliary Bottom Light 42
3.7 Camera 43
3.7.1 Camera Structure 43
3.7.2 Camera Operations 44
3.8 Gimbal 45
3.8.1 Gimbal Mechanical Rotation Range 46
3.8.2 Gimbal Operations 46
3.8.3 Replacing the Gimbal 47
3.9 Flight Control System 49
3.9.1 Flight Status 49
3.9.2 Flight Modes 50
3.9.3 Intelligent Flight Function 51
3.9.4 Hot Swap Battery 51
3.10 Installing the microSD Card 52
3.11 Connecting to PC/MAC 52
3.12 Extension Interface 53
3.13 Protection Rating 54
3.14 Noise 54
3.15 Autel SkyLink Image Transmission Function 55

Chapter 4 Remote Controller 60

4.1 Introduction 60
4.1.1 Remote Controller Components 60
4.1.2 Communication Frequency Bands 63

4.2 Installing the Remote Controller Lanyard 65
4.3 Installing/Storing Command Sticks 66
4.4 Turning the Remote Controller On/Off 67
4.5 Checking the Battery Level of the Remote Controller 68
4.6 Charging the Remote Controller 69
4.7 Adjusting the Antenna Position of the Remote Controller 70
4.8 Remote Controller System Interfaces 71
4.8.1 Remote Controller Main Interface 71
4.8.2 Shortcut Menu 74
4.9 Frequency Pairing With the Remote Controller 75
4.9.1 Using the Autel Enterprise App 75
4.9.2 Using Combination Keys (For Forced Frequency Pairing) 76
4.10 Selecting Stick Mode 77
4.10.1 Stick Modes 77
4.10.2 Setting Stick Mode 79
4.10.3 Starting/Stopping the Aircraft Motor 80
4.11 Remote Controller Keys 81
4.11.1 Custom Keys C1 and C2 81
4.11.2 Take-off/Return-to-Home Button and Pause Button 82
4.12 Turning On/Off the Remote Controller Prompt Sound 83
4.13 Calibrating the Remote Controller 84
4.14 HDMI Screen Output 84

Chapter 5 Smart Battery 85

5.1 Battery Introduction 85
5.2 Smart Battery Functions 86
5.3 Smart Battery Usage 87
5.3.1 Installing/Removing the Smart Battery 88
5.3.2 Turning On/Off the Smart Battery 89
5.3.3 Checking Battery Level 89
5.3.4 Smart Battery Self-heating 90
5.3.5 Charging the Smart Battery 92
5.4 Storing and Transporting the Smart Battery 94
5.5 Maintaining and Handling the Smart Battery 95
5.5.1 Maintaining the Smart Battery 95
5.5.2 Standard Charging and Discharging Process 95
5.5.3 Smart Battery Replacement Standards 95
5.5.4 Recycling the Smart Battery 95

Chapter 6 Autel Enterprise App 97

6.1 Software Introduction 97

6.2 Main Interface 97
6.3 Status Notification Bar 100
6.4 Shortcut Toolbar 102
6.5 “Settings” Interface 105
6.5.1 Flight Control Parameter Setting 106
6.5.2 OA Settings 108
6.5.3 RC Settings 110
6.5.4 Image Transmission Settings 111
6.5.5 Aircraft Battery 112
6.5.6 Gimbal Settings 114
6.5.7 More 115
6.6 Attitude Ball 119
6.7 "Map" Interface 120
6.8 Camera Interfaces 122
6.8.1 Camera Function Area 122
6.8.2 “Zoom Camera” Interface 126
6.8.3 “Thermal Camera” Interface 127
6.8.4 “Night Vision Camera” Interface 129
6.8.5 “Wide Angle Camera” Interface 130
6.9 Flight Missions 131
6.9.1 Waypoint 131
6.9.2 Rectangle Mission 138
6.9.3 Polygon 144
6.9.4 Pre-flight Check 147
6.9.5 Resume Mission 148
6.9.6 Mission and Favorites 149
6.9.7 Personal Center 150

Chapter 7 Firmware Updates and Maintenance 151

7.1 Aircraft and Remote Controller Firmware Updates 151
7.2 Aircraft Parts Maintenance 152
7.3 Troubleshooting Guide 153

Appendix A Product Specifications 157

A.1 Aircraft 157
A.2 Gimbal Camera 161
A.2.1 Fusion 4T (EVO Max 4T) 161
A.2.2 Fusion 4N (EVO Max 4N) 164
A.3 Remote Controller 167
A.4 Smart Battery 169

Appendix B Declaration of Conformity 171

Chapter 1 Product Overview

1.1 Introduction

The EVO Max series aircraft is equipped with an industry-leading high-performance processing chip, has powerful autonomous flight and self-organizing network mission capabilities, is integrated with a visual sensing system and a millimeter-wave radar sensing system, and has an omnidirectional obstacle avoidance system. With an excellent power management system, the aircraft can reach a flight time of up to 42 minutes. Also, it utilizes a three-axis stabilized gimbal, allowing you to view observed videos and data from different lenses in real time through the Autel Enterprise App.

The EVO Max series aircraft adopts a foldable arm design and can hold its propellers for easy storage and transportation. The top of the aircraft is equipped with a PSDK interface, allowing you to add different industry-specific mounts on the aircraft to meet various operational needs.

The EVO Max series aircraft comes with a built-in ADS-B receiver, which can detect the status of manned aircraft and provide alerts on the Autel Enterprise App. This allows for quick and safe operation, thereby avoiding potential collisions. The top of the aircraft is equipped with high-intensity strobes for indicating the aircraft's position in the air, while the bottom is equipped with auxiliary lights to improve visual positioning performance in weak light conditions, thus enhancing flight safety during landing.

The Autel Smart Controller V3 (hereinafter referred to as "remote controller") adopts the Autel SkyLink 2.0 Image Transmission solution, has strong anti-interference capabilities, and can achieve stable transmission of HD videos to the display screen of the Remote Controller. The remote controller is equipped with multiple function buttons, enabling quick aircraft control and camera operation.

The remote controller features a 7.9-inch 2048×1536 high-brightness touchscreen with a maximum brightness of 2000 nits. It adopts a customized Android system that supports the installation of third-party apps and offers functions such as satellite-based positioning, Wi-Fi, Bluetooth, and HDMI output. Moreover, it supports the PD65 fast charging protocol, allowing it to operate up to 4.0 hours on a full charge.

Tip

- The visual sensing system and millimeter-wave radar sensing system have limitations in usage environments and regions. Please read the "Disclaimer and Safety Operation Guidelines" to learn about relevant safety precautions.
- The flight time of the aircraft is measured in a laboratory environment (The aircraft flies at a constant speed of 10 meters per second in a light breeze environment) and is for reference only. The actual flight time may vary depending on factors such as environmental conditions and flight mode.
- The 4.0-hour operating time of the remote controller is measured with the screen brightness set to 50% and is for reference only. The operating time may vary in different scenarios.

⚠ Warning

- If multiple aircraft are flying in an area at the same time, please keep an appropriate air distance to avoid any accidents.

1.2 What's In The Rugged Case

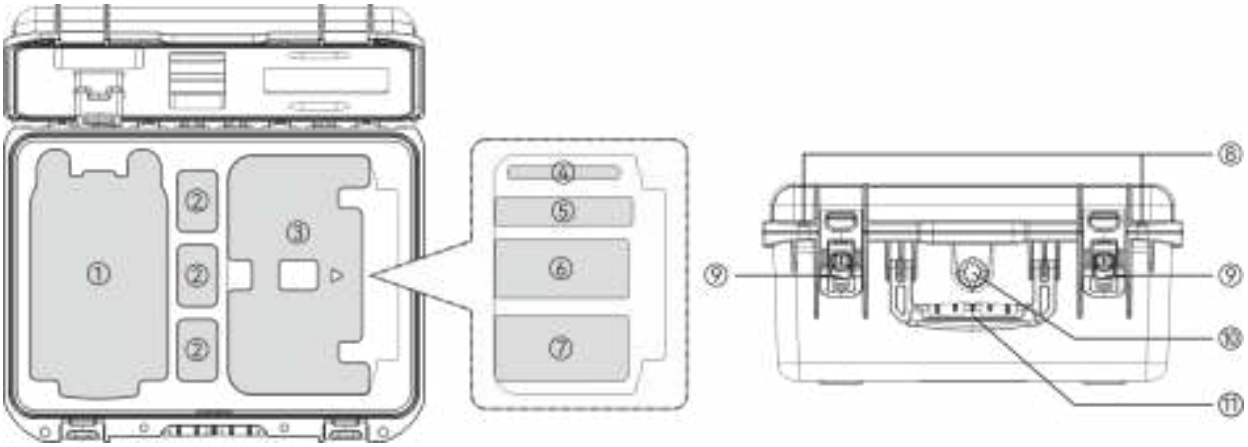

No.	Item	Note
1	Aircraft	Includes a gimbal camera, a gimbal protective cover, and propellers. When storing it, please fold the arms and hold the propellers.
2	Smart Battery	Comes with 1 battery and provides 3 battery storage slots as standard.
3	Remote Controller	Comes with 1 Autel Smart Controller V3.
4	Document Box	Includes "Quick Start Guide" and a camera lens cleaning cloth. To obtain other user documents, please scan the corresponding QR code.
5	Reserved Storage Slot	/
6	Battery Charger	Includes a charger and an AC power cable.
7	Accessory Area	Includes a remote controller charger, a USB-C to USB-C data cable, a USB-C to USB-A data cable, a remote controller lanyard, spare propellers (CW×1 and CCW×1), and spare sticks (×2).
8	Padlock Hole	You can configure a safety lock as needed.

9	Latch	Press down on the unlock button in the middle of the latch and lift the latch upwards to open the rugged case.
10	Handle	When moving the rugged case, be sure to grip the handle.
11	Pressure Balance Valve	Maintains pressure balance inside and outside the rugged case, making it easier to open.

Important

- Upon receiving the product, please inspect the rugged case in its entirety and confirm that its outer packaging is intact, with no signs of unpacking. Meanwhile, save the unboxing video for potential logistics damage claims.

1.3 Product Acceptance Checklist

After unboxing the product, please check whether the actual items match the items described in the following packing list and carefully inspect the appearance of the aircraft and all accessories. If anything missing or damage is found, please contact Autel Robotics After-Sales Support or authorized dealers promptly.

Table 1-1 Packing List

No.	Item	Model/Specification	Quantity	Note
1	Aircraft	MDX	1	Includes 4 propellers, 1 gimbal camera (as per the purchased model), and a gimbal protective cover.
2	Gimbal Camera	Fusion 4T	1	EVO Max 4T Gimbal.
		Fusion 4N	1	EVO Max 4N Gimbal.
3	Gimbal Protective Cover		1	
4	Smart Battery	MDX_8070_1488	1	
5	Remote Controller	RCPad	1	Autel Smart Controller V3 comes with 2 command sticks and 2 antennas.
6	Battery Charger	MDX120W	1	
7	AC Power Cable		1	Used with the battery charger.
8	Remote	GaN-001US	1	

	Controller Charger			
9	USB-C to USB-C Data Cable		1	Used with the remote controller charger.
10	USB-C to USB-A Data Cable		1	
11	Spare Propeller	CW and CCW	1	One CW propeller and one CCW propeller.
12	Spare Stick		2	
13	Remote Controller Lanyard		1	
14	Smart Controller Cover		1	
15	"Quick Start Guide"		1	Placed in the document box.
16	Lens Cleaning Cloth		1	Placed in the document box.
17	Product Certification		1	

1.4 UAS Introduction

Before first flight, please perform a comprehensive inspection of the UAS to ensure that all components meet the following requirements. A complete UAS consists of two parts: the aircraft and the remote controller. The relevant requirements and explanations are as follows :

■ Aircraft Components And Payload

Please be noted that a complete aircraft includes the aircraft body, gimbal camera, propellers, and the battery. Any damage or missing of these components may result in a malfunction.
The RTK module is an optional accessory for enhancing aircraft positioning accuracy.

Table 1-2 EVO Max Series Component List

Item	Product Info	Manufacturer	Note
EVO Max 4T Aircraft	Max. weight: 1640 g Max. Dimension: 562×651×147 mm EAN: 6924991123408 UPC: 889520203401	Autel Robotics	Includes 4 propellers, 1 battery, and a Fusion 4T Gimbal.

EVO Max 4N Aircraft	Max. weight: 1665 g Max. Dimension: 562×651×147 mm EAN: 6924991127260 UPC: 889520207263	Autel Robotics	Includes 4 propellers, 1 battery, and a Fusion 4N Gimbal.
MDX_8070_1488 Smart Battery	Max. weight: 520 g Max. Dimension: 158.4×74.3×50.7 mm EAN: 6924991124412 UPC: 889520204415	Autel Robotics	Included
CW/CCW Propeller	Max. weight: 10 g Max. Dimension: 11 inches EAN: 6924991125297 UPC: 889520205290	Autel Robotics	Included
RTK Module	Max. weight: 28 g Max. Dimension: 73×49×46 mm EAN: 6924991127222 UPC: 889520207225	Autel Robotics	Optional

Tip

- For RTK module instructions, see "3.12 Extension Interface " in Chapter 3.
- All the above components have passed Autel Robotics safety and compatibility tests, users can purchase and use accordingly.
- In case of adding any payload before flight, please evaluate the check the mounting weight reasonably. More details, see "2.5 Declaration of Maximum Take-off Mass" In Chapter 2.

■ Remote Controller Components & The App

A complete remote controller includes the controller body (equipped with a functional touchscreen and buttons), joysticks, and antennas. Any damage or missing of these components may result in a malfunction. The Autel Enterprise App, serving as the flight application software that controls the aircraft, should be maintained to ensure comprehensive control over the UAS.

Table 1-3 Remote Controller Components List

Item	Product Info	Operating System	Manufacturer	Note
Autel Smart Controller V3	Max. weight: 1194 g Max. Dimension: 269×302×87 mm EAN: 6924991129011 UPC: 889520209014	Android 11	Autel Robotics	Includes 2 command sticks and 2 antennas.

Table 1-4 Firmware and Software version explanation

No.	Item	Release Version	Note	Release Date
1	Image Transmission	V1.6.0.13	/	23Q3
2	Remote Controller	V6.0.4.3	/	23Q3
3	Android System	V1.6.0.13	Based on Android 11	23Q3
4	Autel Enterprise	1.4.5	Flight Control Software	23Q3

Tip

- The above information is for reference only. Both the remote controller and the aircraft have been upgraded to the latest versions before shipment. Users can use accordingly.
- When the remote controller and the aircraft are frequency-paired and the remote controller is connected to the internet, Autel Enterprise App will automatically check for firmware updates. More instructions, see "7.1 Aircraft and Remote Controller Firmware Updates" in the Chapter 7.
- When there's any prompt for updates, please follow the instructions to update accordingly to address any issues and to enjoy the new features. Users also have the option to temporarily pause updates; however, this won't affect the existing functions.

Table 1-5 List of Pre-installed Apps on the Remote Controller

NO.	Pre-installed App	Software Version	Note
1	Autel Enterprise	1.4.5	Flight Control Software
2	Files	11	System Software
3	Gallery	1.1.40030	System Software
4	Chrome	68.0.3440.70	System Software
5	Settings	11	System Software
6	Maxitools	2.45	System Software
7	Google Pinyin Input	4.5.2.193126728-arm64-v8a	System Software
8	Android Keyboard (AOSP)	11	System Software

Tip

- The pre-installed system apps mentioned are the basic application for the remote controller. Users also have the option to install third-party software if desired.

Chapter 2 Flight Safety

When unboxing the product for the first time, please scan the QR code provided in the "Quick Start Guide" to access the electronic version of this manual, and then carefully read and understand the contents of this manual, so as to ensure safe and proper use of the aircraft.
Before operating any actual flight, be sure to first carry out relevant basic flight training (such as watching tutorial videos and receiving guidance from a professional) and be familiar with the functions and characteristics of the aircraft and the remote controller.
Before the flight, please understand all the local laws and regulations regarding civil unmanned aerial vehicles (UAVs) in advance, and according to the local flight requirements and restrictions, select an appropriate flight environment and set a reasonable flight altitude for legal flights. There may be legal risks when using an aircraft in an unsuitable flight environment.
Before flying, be sure to read the "Disclaimer and Safety Operation Guidelines" to understand all safety precautions.

2.1 Legal Use Notice

When unboxing the product for the first time, please comply with your local regulations in accordance with the laws and regulations of the following countries and regions to complete the real-name registration of the aircraft.

2.1.1 Chinese Mainland

- According to the “Regulations on Real-name Registration of Civil Unmanned Aerial Vehicles” issued by the Civil Aviation Administration of China (CAAC), upon purchasing a civil drone, the owner must register the drone on the “Civil UAV Comprehensive Management Platform” (https://uom.caac.gov.cn) in real name and paste the QR code registration mark on the drone. Those who fail to implement real-name registration and paste registration marks will be punished by the regulatory authorities in accordance with relevant regulations.
- The EVO Max series aircraft is a light unmanned drone. Autel Robotics prohibits youth under the age of 18 from operating this aircraft.
- We recommend that you read the “Interim Regulations on the Management of Unmanned Aircraft Flights” before flying to learn more about the regulations.

Important

- According to the regulations outlined in the "Civil Unmanned Aerial Vehicle System Safety Requirements" in Chinese mainland, users are required to input their real-name registration number in the Autel Enterprise App after registration. Additionally, users should enable the DRI system and the Civil Aviation Administration's flight dynamic data reporting function. For more details, see “2.14 Direct Remote Identification” in this Chapter and “6.5.7 More” in Chapter 6.

2.1.2 The U.S.

- Before using a drone, the owner of the drone must register the drone on the FAA website (https://faadronezone-access.faa.gov/#/) in real name (Registrants must be 13 years of age or older). Failure to register an unmanned aircraft that is required to be registered may result in regulatory and criminal penalties.
- The Federal Aviation Administration (FAA) may assess civil penalties up to $27,500. Criminal penalties include fines of up to $250,000 and/or imprisonment for up to three years.

2.1.3 The EU

- Drone operators/owners must register with the National Aviation Authority (NAA) of the Member State in which they reside.
  (https://www.easa.europa.eu/en/domains/civil-drones/naa).
- This product is not a toy and should not be used by children under the age of 16.
- In the EU, the EVO Max series aircraft is a drone classified as C2. When using the aircraft, you must comply with the following operational limitations in subcategory A2 in an urban environment:
  1. Must not overfly uninvolved people.
  2. Maintain a horizontal distance of 30 meters from uninvolved people (can be reduced to 5 meters if the low-speed function is activated).
  3. Maintain flight altitude below 120 meters above ground level.
- The EVO Max series aircraft can also fly in subcategory A3.
- Remote pilot should obtain a 'Remote pilot certificate of competency' for A2 'open' subcategory by:
  1. Having a 'Proof of completion for online training' for A1/A3 'open' subcategory.
  2. Conducting and declare a practical self- training.
  3. Passing an additional theoretical exam at the NAA or proctored online.

Important

- According to the relevant laws and regulations in the EU, the EVO Max series aircraft is equipped with sensors (gimbal cameras) that can detect personal data. Users are required to register in compliance with the laws and regulations when using the aircraft.
- After registration, please enter the operator registration number in the Autel Enterprise App and activate the DRI system. For more information, see "2.14 Direct Remote Identification" in this chapter.

2.1.4 Other Countries and Regions

Before flying, consult local legal professionals or aviation authorities to learn about local laws, regulations, and policies regarding civil UAVs and follow relevant guidelines for legal registration.

2.2 Flight Operation Guidelines

Before flying, be sure to understand and adhere to the following flight operation guidelines to avoid serious consequences and legal violations:

- Do not operate the aircraft while under the influence of alcohol, drugs, medication, dizziness, fatigue, or nausea, or in any other poor physical or mental conditions.
- Do not fly near manned aircraft, and make sure that the aircraft does not interfere with large manned aircraft in the same flight path when flying. Keep vigilant at all times and avoid other aircraft. Land immediately if necessary.
- Do not fly in areas prohibited by local regulations without authorization. The prohibited areas may include airports, borders, major cities, densely populated areas, large event sites, emergencies (e.g., forest fires), and sensitive building facilities (e.g., nuclear power plants, power stations, hydroelectric power stations, prisons, traffic arteries, government buildings, and military facilities).
- Do not use the aircraft at large event sites, including but not limited to sports arenas and concerts.
- Do not fly in airspace above the altitude limit specified in regulations.
- Do not use the aircraft to carry any illegal or hazardous goods.
- Be aware of the flight activity category (e.g., recreational, official, or commercial). Before flying, be sure to obtain the necessary permits from relevant authorities. If necessary, consult local legal professionals for a detailed explanation of flight activity categories.
- When using the aircraft for filming or photography, respect the privacy rights of others. Do not use the aircraft for unauthorized surveillance activities, including but not limited to monitoring individuals, groups, events, performances, exhibitions, or buildings.
- Note that using cameras to film or photograph individuals, groups, events, performances, exhibitions, or buildings without authorization may infringe upon copyrights, privacy rights, or other legal rights of others. Therefore, it is essential to familiarize yourself with and comply with local laws and regulations before using the aircraft.

2.3 Flight Environment Requirements

- Do not fly in severe weather conditions such as strong winds, snow, rain, heavy fog, dust storms, extreme cold, or extreme heat. The aircraft has a maximum wind resistance of 12 meters per second during take-off and landing.
- Make sure that the aircraft takes off from and lands on open, unblocked, and flat ground, away from crowds, nearby buildings, trees, etc., and within a visual line of sight for flight safety.
- Fly at an altitude below 4000 meters.
- Due to insufficient lighting conditions, no GNSS signal, and narrow space, some functions may be limited. Always pay attention to the surrounding environment of the aircraft and maintain control of the aircraft at all times.
- When flying at night, turn on the strobe and make sure that the Aux Light is enabled during landing for flight safety.
- Do not take off from or land on moving surfaces such as moving vehicles or boats.
- Do not take off from or land on sandy surfaces to prevent sand particles from affecting the motor service life.

- The performance of the aircraft's smart battery is subject to ambient temperature and air density. Please use the aircraft within the temperature range of -20°C to +50°C.
- When using the aircraft in post-disaster scenarios such as fires, explosions, lightning, storms, tornadoes, heavy rain, floods, earthquakes, and dust storms, pay special attention to the safety of take-off and landing points and changes in the surrounding environment and prioritize personal safety.
- Keep the aircraft away from steel structures, iron ore mines, etc., to avoid interfering with the compass of the aircraft.

2.4 Wireless Communication Requirements

- Keep the aircraft at least 200 meters away from areas with strong electromagnetic interference, such as radar stations, microwave stations, mobile communication base stations, and drone interference equipment.
- When flying near sources of electromagnetic interference, exercise caution and continuously observe and assess the stability of image transmission signals and videos of the remote controller. Common sources of electromagnetic interference include but are not limited to high-voltage power lines, high-voltage substations, mobile communication base stations, and television broadcasting signal towers. If the aircraft encounters significant signal interference when flying near these locations, it may not be able to work normally. In this case, please return to the home point for landing as soon as possible.
- Fly in open, unblocked areas or highlands. Tall mountains, rocks, urban buildings, and forests may block the GNSS signal and image transmission signals of the aircraft.
- It is recommended to turn off unnecessary Wi-Fi and Bluetooth devices in the vicinity to avoid interference with the signals of the remote controller.

2.5 Declaration of Maximum Take-off Mass

During flight operations, make sure that the actual take-off mass of the aircraft does not exceed the maximum take-off mass (MTOM) declared for the aircraft. Exceeding this limit can lead to safety accidents. For detailed data, see Appendix A “A.1 Aircraft”.
The actual take-off mass of the aircraft consists of the aircraft's mass and the mount mass. Before adding any mount, make sure that the mount mass is within a reasonable range.

Note

- The aircraft's mass comprises the mass of the fuselage, gimbal camera, propellers, and smart battery. Different models of gimbal cameras may have varying masses. If you change the gimbal camera to a different model, re-weigh the aircraft to determine its mass.
- Mounts consist of functional module mounts and physical mounts. When adding mounts to the aircraft, always re-weigh the actual take-off mass of the aircraft.
- The mount mass should satisfy: Maximum Mount Mass⩽MTOM – Aircraft's Mass.

2.6 Obstacle Avoidance System

2.6.1 Introduction to Visual Sensing System and Millimeter-Wave Radar Sensing System

The aircraft adopts a dual-sensing system design of "Visual Sensing System + Millimeter-Wave Radar Sensing System". The integration of these two systems provides excellent omnidirectional obstacle avoidance performance and ensures precise positioning and safe flight of the aircraft.

The visual sensing system is an image positioning system that uses visual image ranging to sense obstacles and obtain aircraft position information. The visual sensing system of the aircraft is located on the front, rear, top, and bottom of the fuselage. The front and rear parts use a "dual pinhole lens" structure, while the top and bottom parts use a "dual fisheye lens" structure, the combination of which enables omnidirectional visual obstacle avoidance.

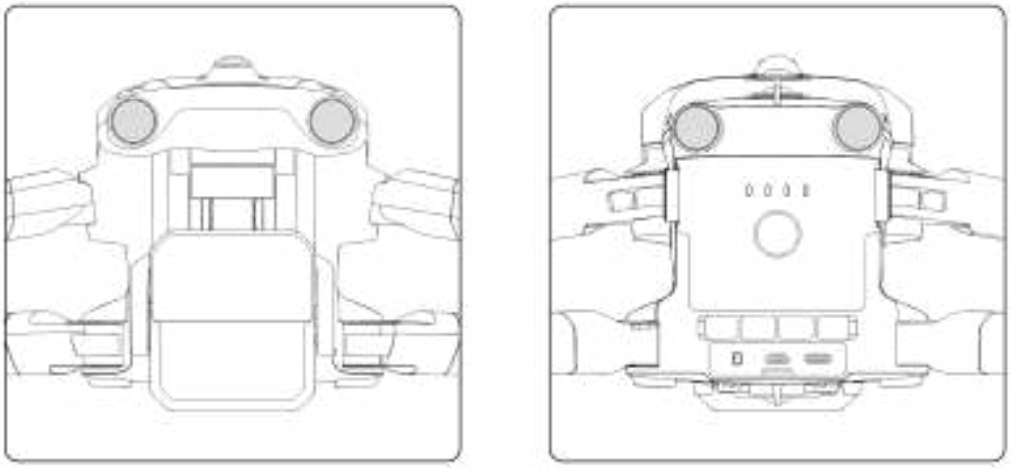

Fig 2-1 Front and rear visual lens modules of the aircraft

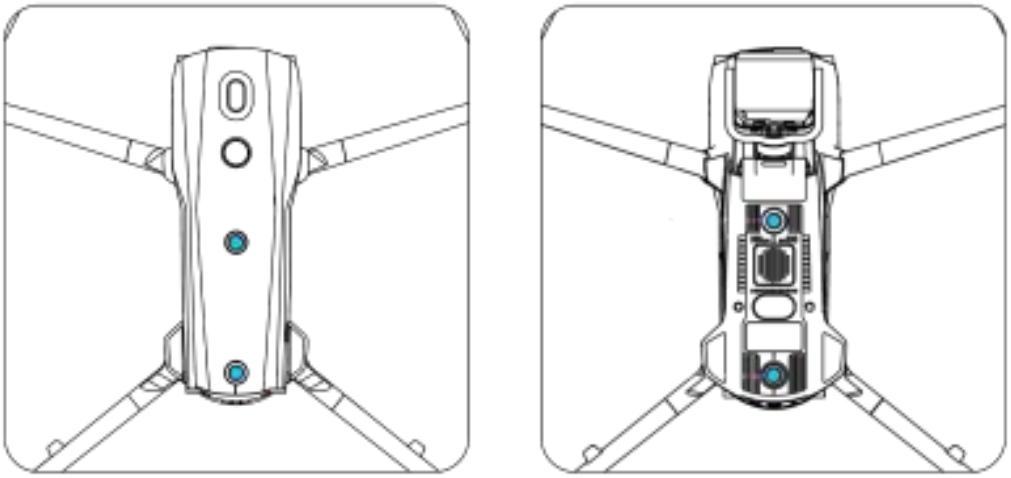

Fig 2-2 Top and bottom visual lens modules of the aircraft

Warning

- Do not block the lenses of the visual sensing system during flight, as it will affect the visual obstacle avoidance performance of the aircraft, potentially leading to flight accidents.

The millimeter-wave radar sensing system senses the distances and positions of obstacles by emitting electromagnetic waves. According to the regulations of different countries and regions, the millimeter-wave radar sensing system of the aircraft can either integrate four 60 GHz millimeter-wave radars inside the fuselage in four directions (front, rear, top, and bottom) or integrate a 24 GHz millimeter-wave radar under the fuselage for sensing.

Note

- For detail frequency bands and Effective Isotropic Radiated Power (EIRP) data of the millimeter-wave radar, see Appendix A "A.1 Aircraft".
- For the four millimeter-wave radars used in the EVO Max series aircraft, the front, rear, and top millimeter-wave radars use the 60 GHz frequency band, while the frequency band used for the bottom millimeter-wave radar depends on local regulations.
- Please be noted that the frequency band of the millimeter-wave radar is a hardware parameter, which cannot be adjusted through software. Autel Robotics ensures that the millimeter-wave radar frequency band of the EVO Max series drones complies with local legal regulations.

2.6.2 Observation Range

■ Observation Range of Visual Sensing System

By using fisheye lenses, the visual sensing system achieves a 180° field of view (FOV) in both left and right directions, allowing for 720° all-around observation.

Important

- The visual obstacle avoidance performance of the visual sensing system is not 100% reliable, as the system may be affected by ambient lighting and object surface texture. When the visual obstacle avoidance system is enabled during flight, always pay attention to the image transmission screen in the Autel Enterprise App.

■ Observation Range of Millimeter-wave Radar Sensing System

Note

- Please be aware that millimeter-wave radars of different frequency bands may have varying observation performance.

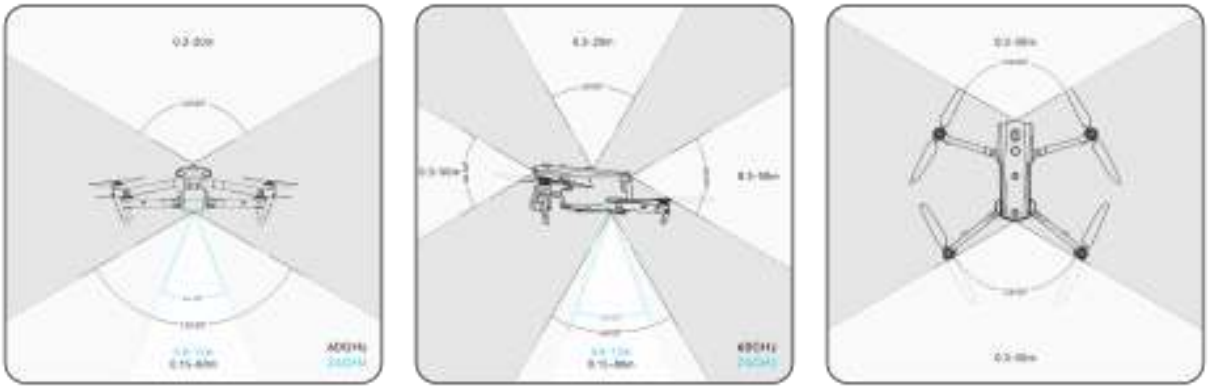

Fig 2-3 Observation Range of Millimeter-wave Radars

⚠ Warning

- The obstacle avoidance distance of the millimeter-wave radar sensing system varies with the obstacle's ability to reflect electromagnetic waves and its surface size.
- The gray area represents the blind spot of a millimeter-wave radar, where the radar cannot detect obstacles.

■ Observation Range of Radar and Visual Sensing Systems

With the integration of radar and visual sensing systems, the aircraft achieves 720° omnidirectional obstacle avoidance and supports nighttime obstacle avoidance.

Note

- If the aircraft uses a 60 GHz bottom millimeter-wave radar, it supports nighttime obstacle avoidance by millimeter-wave radars.
- If the aircraft uses a 24 GHz bottom millimeter-wave radar, the front, rear, and top millimeter-wave radars are disabled by default. The aircraft does not support nighttime obstacle avoidance by millimeter-wave radars and only supports visual obstacle avoidance in good lighting conditions. Additionally, it uses the bottom millimeter-wave radar only for assisted landing.

2.6.3 Visual Positioning Function

The aircraft supports the visual positioning function even without GNSS signals. It means that the aircraft can provide flight positioning capability in case of poor or no GNSS signal to ensure flight safety.

When there is GNSS positioning information, the visual positioning function supplements the aircraft's position information, enhancing positioning accuracy.

When there is no GNSS signal and the environment and height cannot meet the visual sensing system, that is, when there is no GNSS signal and visual positioning failure at the same time, the ATTI mode will be activated.

Warning

- If you do not have extensive flight experience, do not fly the aircraft beyond your visual line of sight.
- When the aircraft relies on visual positioning to fly, please do not approach mirror reflection areas such as water or snow. When the GNSS signal is poor, please make sure that the aircraft flies in a well-lit environment and over object surfaces with clear texture.

Tip

In the event of GNSS signal loss or weakening during flight, the remote controller will display the following warning prompts:

- If the takeoff point is inaccurate: The Autel Enterprise App will display a warning saying "GNSS signal is weak, home point may have deviation." with a corresponding verbal warning.
- If GNSS signal is weak: The Autel Enterprise App will show a warning saying "GNSS signal is weak, please fly away from buildings." with a corresponding verbal warning.
- If GNSS is being spoofed: The Autel Enterprise App will display a warning saying "Aircraft is being subjected to GNSS spoofing." with a corresponding verbal warning.
- If the aircraft is in ATTI mode, the Autel Enterprise App will show a warning saying "No GNSS and visual positioning, please be cautious." with a corresponding verbal warning.
- If GNSS is manually turned off and aircraft positioning is available, the Autel Enterprise App will show a warning saying "GNSS is turned off, visual positioning signal is normal/weak, please fly with caution." with a corresponding verbal warning.
- If GNSS is manually turned off and aircraft positioning is lost, the Autel Enterprise App will display a warning saying "No GNSS and visual positioning, please be cautious." with a corresponding verbal warning.

2.6.4 Visual Obstacle Avoidance Function

The visual obstacle avoidance function is suitable for scenarios where the aircraft flies in a well-lit environment and encounters obstacles that are not too sparse during the flight, such as sparse fine wire meshes or small branches at the outer edges of trees. Additionally, due to inertia, the aircraft needs to brake at an effective distance under control. The flight control system limits the aircraft's attitude angle to no more than 30° and the maximum flight speed to less than 15 meters per second during deceleration. For more information, see “6.5.2 OA Settings” in Chapter 6.

Warning

- The obstacle avoidance function of the aircraft cannot be enabled in Ludicrous mode.

2.6.5 Precautions for Using Obstacle Avoidance Systems

The measurement accuracy of the visual sensing system is easily affected by factors such as light intensity and object surface texture. Exercise caution when using the visual sensing system in the following scenarios:

- Flying over pure-colored surfaces (e.g., pure white, pure black, pure red, and pure green) and low-texture surfaces.
- Flying over surfaces with strong reflections.
- Flying over moving objects (e.g., crowds, swaying reeds, bushes, and grasses).
- Flying over water surfaces or transparent object surfaces.
- Flying in environments with rapid and intense changes in lighting or direct exposure to strong light sources.
- Flying over extremely dim (with light intensity of less than 15 lux) or extremely bright object surfaces.
- Flying over small obstacles (e.g., iron wires, electric wires, and tree branches).
- Lenses contamination (e.g., water droplets and fingerprints).
- Flying in low-visibility conditions (e.g., heavy fog and heavy snow).
- Flying at an altitude below 2 meters with a very fast flight speed.

The millimeter-wave radar sensing system operates as an auxiliary enhancement system for visual obstacle avoidance and can work continuously throughout the day.

Note

- Please be noted that when flying in low-light conditions (such as at night), the aircraft's visual perception system is affected, so the obstacle avoidance is not working.
- If you need to fly in low-light conditions (such as at night), please confirm that the aircraft is 60 GHz version with downward millimeter-wave radar (aircraft with the 24 GHz version of downward radar does not have nighttime millimeter-wave obstacle avoidance capability). Additionally, please operate cautiously in nighttime flights, as in the nighttime obstacle avoidance is not 100% functional. It is recommended to fly in open areas.

2.7 Auto-return

The aircraft is equipped with an auto-return function. When the GNSS signal is good, once the auto-return condition is triggered, the aircraft automatically returns to the home point and lands to avoid possible accidents.

The aircraft provides three methods of activating the auto-return function: manual auto-return activation, low battery auto-return activation, and behavior-based auto-return activation.

Note

- Home point: the landing point of the aircraft during an auto-return flight. In the Autel Enterprise App, you can set the home point of the aircraft as "Aircraft" or "RC". For more information, see “6.5.1 Flight Control Parameter Setting” in Chapter 6.
- If no home point is set in the Autel Enterprise App, the take-off point is used as the home point.

- During an auto-return, the control function of the remote controller for the aircraft is disabled. In this case, you can quickly press the pause button "⏸" on the remote controller or long press it for two seconds to pause or exit the auto-return function and regain control of the aircraft. For more information, see "4.11.2 Take-off/Return-to-Home Button and Pause Button" in Chapter 4.

⚠ Warning

- When the GNSS signal is poor, the auto-return function cannot be activated.
- If the obstacle avoidance system is disabled during an auto-return flight, the aircraft will not be able to automatically avoid obstacles.
- If the home point of an auto-return flight is not suitable for the aircraft to land (such as uneven grounds and crowds), please exit the auto-return function first, and then manually assume control to land.

2.7.1 Manual Auto-return Activation

During the flight, you can long press the return-to-home button "⌂" on the remote controller for 2 seconds to manually activate the auto-return function.

2.7.2 Low Battery Auto-return Activation

During the flight, to prevent unnecessary risks caused by insufficient power of the smart battery, the aircraft will automatically check whether the current battery level is sufficient based on the aircraft's current position.
If the current battery level is only enough to complete the return journey, the Autel Enterprise App will prompt a warning saying "The remaining battery is only enough for Return to Home. The aircraft will Return to Home in 10s." to reminder users to decide i to execute low battery auto-return. If you choose to execute it or don't take any action within 10 seconds, the aircraft will initiate low battery auto-return after 10 seconds.
If you cancel the execution and continue flying with a low battery level, when the battery level is only enough for landing, the aircraft will activate a critically low battery landing. This landing process cannot be canceled, and you will lose control of the aircraft in this process.

Tip

- The low battery auto-return and critically low battery landing mentioned here have no direct relation with the low battery warning and critically low battery warning set in the Autel Enterprise App.

Warning

- When the low battery auto-return is triggered in the aircraft, the auto-return process should not be canceled. Otherwise, the aircraft may be unable to return to the home point due to insufficient power.
- Try not to let the aircraft enter the critically low battery landing process. Once the critically low battery landing process is initiated, regardless of whether the landing point meets safe landing standards, the aircraft will forcibly land, which may lead to aircraft damage.
- When the Autel Enterprise App displays a warning alert, it should be processed according to the corresponding references immediately.

2.7.3 Behavior-based Auto-return Activation

During a flight mission, if "Finish Action" is set to "Auto RTH", the aircraft will activate auto-return after completing the mission; if "Signal Loss Action" is set to "Auto RTH", when the remote controller disconnects from the aircraft for 4 seconds, the aircraft will activate auto-return. For more information, see “6.9 Flight Missions” in Chapter 6.
During the flight, if "Lost Action" is set to "Return to Home", when the remote controller disconnects from the aircraft for 4 seconds, the Autel Enterprise App will display a warning saying “Aircraft disconnected.” and the aircraft will activate auto-return. For more information, see “6.5.1 Flight Control Parameter Setting” in Chapter 6.

Tip

- In the Autel Enterprise App, "Lost Action" is set to “Return to Home” by default.
- Within 4 seconds of the remote controller disconnecting from the aircraft, the aircraft will continuously decelerate and attempt to reconnect the remote controller. If the reconnection is not successful within 4 seconds, the aircraft will activate the lost action auto-return.
- During the lost action auto-return process, even if the aircraft resumes connection with the remote controller, the aircraft will continue to execute auto-return.

2.7.4 Auto-return Mechanism

Table 2-1 Auto-return Mechanism

Aircraft distance when the return mechanism is triggered	Return-to-Home Mechanism
Distance from the home point ≤ 10 meters	The aircraft returns to the home point at the current altitude.
10 meters＜Distance from the home point ≤ 25 meters	If the current flight altitude is lower than 20 meters, the aircraft ascends to the altitude of 20 meters and returns to the home point. If the current flight altitude is higher than 20 meters,

	the aircraft returns to the home point at the current altitude.
25 meters < Distance from the home point ≤ 50 meters	If the current flight altitude is lower than 30 meters, the aircraft ascends to the altitude of 30 meters and returns to the home point. If the current flight altitude is higher than 30 meters, the aircraft returns to the home point at the current altitude.
Distance from the home point > 50 meters	If the flight altitude is lower than the set RTH altitude, the aircraft ascends to the RTH altitude. If the flight altitude is higher than the set RTH altitude, the aircraft returns to the home point at the current altitude.

Note

- Home point: the point where the aircraft will return and land during an auto-return.
- Aircraft distance refers to the horizontal distance from the current aircraft to the home point.

2.7.5 Auto-return Obstacle Avoidance Process

When the obstacle avoidance system is enabled and the visual sensing system is in appropriate lighting conditions, the aircraft will achieve obstacle avoidance during the return process. The specific situations are as follows:

- During manual flight, in case of a lost action auto-return, low battery auto-return, or manual activation of auto-return, when an obstacle is detected in front of the aircraft, the aircraft will automatically brake within the set brake distance and automatically ascend to avoid the obstacle until it can safely fly over it.
- During flight missions, the obstacle avoidance mode is set to "Bypass". In the case of a lost action auto-return, low battery auto-return, or mission completion auto-return, when an obstacle is detected in front of the aircraft, the aircraft will automatically brake within the set brake distance and autonomously choose a random direction from the left, right, or upward directions to bypass the obstacle.

Important

- During the obstacle avoidance process, if the aircraft's ascent altitude reaches the maximum altitude limit and obstacle avoidance is not yet achieved, the aircraft will hover in place until a critically low battery landing is triggered. In this case, please manually take control of the aircraft in advance.
- When the obstacle avoidance mode is set to “Bypass”, the aircraft will prioritize planning to bypass the obstacle from the left or right direction. If neither left nor right directions

are feasible, it will choose to bypass the obstacle from above.
- During flight missions, if the obstacle avoidance mode is set to "Off", the aircraft will not have obstacle avoidance capabilities.

2.7.6 Landing Protection Function

When the landing protection function is enabled, the aircraft will assess whether the ground conditions are suitable for landing before landing. For more information, see "6.5.2 OA Settings" in Chapter 6.

During the auto-return process, when the aircraft reaches above the home point and the landing protection function is enabled, the aircraft will execute the following strategies:

1. If the landing protection function detects that the ground is suitable for landing, the aircraft will land directly.
2. If the landing protection function detects that the ground is not suitable for landing (e.g., uneven ground or water below), the aircraft will keep hovering, send a prompt in the Autel Enterprise App, and wait for you to take action. In this case, the aircraft will start descending only when a critically low battery landing is triggered, and you cannot cancel this process.
3. If the landing protection function cannot detect ground conditions, the aircraft will descend to an altitude of 1.2 meter above the ground and enter the assisted landing process.

Note

- Assisted landing: During the landing process, when the aircraft reaches an altitude of 1.2 meter above the ground, it will automatically descend slowly and you do not need to lower the throttle stick.
- Before entering the assisted landing process, make sure that the landing point is suitable for the aircraft to land.

2.8 Rebuilding the C2 Link

To ensure the safety and controllability of flight behaviors, the EVO Max series aircraft will stay in reconnection status and constantly attempt to reestablish a connection with the ground control station (remote controller) after losing the C2 link. In practice, this process is divided into the following stages:

- Within the first 4 seconds after the link is disconnected, the aircraft will automatically decelerate and attempt to restore the C2 link. If the connection is restored within 4 seconds, the remote controller regains control of the aircraft.
- If the link is not restored within 4 seconds, the aircraft will automatically trigger the lost action. At this point, the aircraft will automatically execute relevant flight control actions according to the set lost actions.
- During the execution of a lost action, the aircraft will continue its attempts to restore the C2 link. When the aircraft successfully restores the C2 link with the remote controller, the remote controller still cannot control the flight of the aircraft. To make the remote controller regain control of the aircraft, you must long press the pause button "⏸" on the remote controller for 2 seconds to exit the lost action.

Tip

- During the flight, as long as the aircraft and the remote controller can communicate normally, the C2 link will remain active.
- If there are decoding errors that persist for a certain duration, leading to communication failure, the C2 link will be disconnected, and the aircraft will enter the reconnection status.
- The lost actions of the EVO Max series aircraft include RTH, hover, and land.
- If EVO Max Series aircraft lost connection with C2 link, the Autel Enterprise App will display a warning saying “Aircraft disconnected.” with a corresponding verbal warning.

2.9 Flight Restrictions and Unlocking Restricted Zones

Important

- Before flying, always carefully plan out the airspace in which you intend to fly in accordance with local laws and regulations.

2.9.1 Geofencing System

Autel Robotics has developed a geofencing system for its aircraft to ensure safe and legal flights. This system can provide real-time updates on airspace restriction information worldwide. In different restricted zones, the flight functions of the aircraft are subject to varying degrees of restrictions. The geofencing system also supports the function of unlocking restricted zones. If you need to perform a flight mission in a specific restricted zone, you need to obtain legal authorization for unlocking the restricted zone, and then the relevant flight restriction of the aircraft will be unlocked within the authorization validity period.
The geofencing system does not strictly follow local laws and regulations. Before each flight, you should consult and understand local laws, regulations, and regulatory requirements to ensure flight safety.
The flight control system of the EVO Max series aircraft is pre-configured with the geofencing system. Before each flight, make sure that the remote controller can connect to the Internet to automatically update airspace restriction information and synchronously upload it to the aircraft. During the flight, relevant airspace restriction information will be synchronously displayed in the Autel Enterprise App to ensure the safe and legal flight of the aircraft.

Tip

- Due to information lag, the airspace restriction information provided by the geofencing system may not always be completely consistent with the latest local laws and regulations. All information is subject to local laws and regulations.
- For temporary airspace restrictions, Autel Robotics can obtain the relevant regulatory announcements in a timely manner and synchronously upload the relevant airspace restriction information to the geofencing system. When you take flight actions in relevant zones, be sure to synchronize and update flight airspace restriction information.

2.9.2 Restricted Zones

The geofencing system divides airspace restrictions into four categories: no-fly zones, restricted altitude zones, caution zones, and unlocked zones. The Autel Enterprise App will provide different prompts based on the specific zone.

Table 2-2 Flight Restrictions of Restricted Zones

Restricted Zones	Flight Restriction Description
No-Fly Zones (appear in red on the map)	No-fly zones are divided into permanent no-fly zones and temporary no-fly zones. ● Permanent no-fly zones: The zones are pre-configured in the geofencing system at the factory and are regularly updated. ● Temporary no-fly zones: The zones are added by Autel Robotics in the geofencing system backend. Update method: After the remote controller is connected to the Internet, it will automatically retrieve update information related to no-fly zones and push it to the aircraft. Flight restrictions: Aircraft cannot take off or fly in no-fly zones. If you obtain authorization from relevant authorities to fly in a no-fly zone, contact Autel Robotics to request for unlocking the zone.
Restricted Altitude Zones (appear in grey on the map)	Autel Robotics only provides altitude restrictions setting, allowing users to set the altitude limit accordingly. Update process: Users enable height restrictions and set the altitude limit within the Autel Enterprise App, based on the local legal regulations of the country and region. For detailed information, see "2.10 Altitude and Distance Limits" in Chapter 2 and "6.5.1 Flight Control Parameter Settings" in Chapter 6. Flight restrictions: When flying in a restricted altitude zone, the actual flight altitude of the aircraft will not exceed the set altitude limit.
Warning Zones (appear in yellow on the map)	Warning zones are pre-configured in the geofencing system at the factory and are regularly updated. Update method: After the remote controller is connected to the Internet, it will automatically retrieve update information related to warning zones and push it to the aircraft. Flight restrictions: In a warning zone, an aircraft can fly unrestrictedly (relevant flights must comply with local regulations).
Unlocked Zones (appear in blue on the map)	If you unlock a no-fly zone with a valid permit, you can legally fly the aircraft within the validity period in the unlocked zone.

Tip

In the Autel Enterprise App, if you tap on a restricted zone on the map, the following geofencing information will be displayed for this zone:

- No-fly Zone: zone name, zone level (no-fly zone), region (prefecture-level city), and no-fly time (visible only for temporary no-fly zones).
- Restricted altitude zone: zone name, zone level (restricted altitude zone), altitude limit (AGL), and region (prefecture-level city).
- Warning zone: zone name, zone level (warning zone), altitude limit (AGL), and region (prefecture-level city).
- Unlocked zone: zone name, zone level (unlocked zone), altitude limit (AGL), region (prefecture-level city), and validity period.

Note

- Before any flight, users must fully understand the local regulations regarding altitude restrictions for unmanned aerial vehicles (UAVs) and set them in the Autel Enterprise App.
- It is important to note that it is not suggested to fly cross regions with different legal altitude restrictions. The altitude limit setting is only effective for the takeoff area, the limit may not complies with regulations in neighboring regions. Users should adjust the corresponding altitude limits when flying across different regions.

An aircraft in flight has a specific initial velocity. To prevent the aircraft from accidentally entering no-fly zones (before unlocking) and warning zones, a buffer zone with a horizontal distance of 200-meter and a vertical distance of 50-meter is set beyond the boundaries of these zones in the geofencing system.

Table 2-3 Buffer Zone Details

Buffer Zone Type	Buffer Zone Details
Buffer zones of no-fly zones	When an aircraft flies from the outside toward a no-fly zone: When the aircraft approaches the buffer zone boundary, the Autel Enterprise App will display a warning alert says “The aircraft is close to the no-fly zone.” and the aircraft will automatically start to decelerate and eventually brake and hover within the buffer zone.
Buffer zones of warning zones	When an aircraft flies from the outside toward a warning zone: The aircraft can directly fly into the restricted altitude zone without limitation. When the aircraft approaches the warning zone boundary, the Autel Enterprise App will display a warning alert says “The aircraft is close to the warning zone.” and after enter the warning zone, the App will display “Aircraft enters warning zone” to remind users to be cautious.

Note

- When there is a GNSS signal, if an aircraft accidentally enters a no-fly zone while the aircraft is still locked from the zone, the aircraft will automatically land upon regaining the GNSS signal. During the landing process, the throttle stick will not work, but you can control the horizontal movement of the aircraft.
- When an aircraft is hovering in the buffer zone, you can control the aircraft to exit the buffer zone along the normal direction of the boundary.

For flights in an unlocked zone, if an aircraft is within the authorized airspace and validity period specified in the permit, the aircraft can fly normally in the zone. Once the aircraft flies beyond the authorized airspace or reaches the validity period, the aircraft will comply with the airspace restrictions of the current area.

2.9.3 UGZ Import

The aircraft supports for importing the UGZ (UAS Geographical Zones) file, if users get the no-fly zone data files of their own country or region, they can upload the data to the aircraft's flight control system. When the aircraft approaches relevant airspace during flight, it will execute corresponding responses to ensure flight safety (including warnings and slow down and other actions).

Tip

- The UGZ import supports JSON format. Users can import no-fly zone data files published by local aviation authorities.
- Operation path: Copy the JSON file into the root path of the remote controller. On the map interface of the Autel Enterprise App, tap "" > "Import Geo-fence" on the right side. Follow the on-screen instructions to complete the operations.

2.9.4 Unlocking No-Fly Zones

To apply for unlocking a specific airspace within a no-fly zone, prepare the following information in advance according to your flight plan:

1. Identity and contact information of the applicant.
2. Unlock permit: a scanned copy or image of the valid permit for the flight application issued by local authorities (local public security bureau, aviation management department, or any other relevant organization/agency).
3. Unlocked zone: a cylindrical area. It includes the following information:
   - Name of the unlocked zone.
   - Coordinates of the center point of the flight airspace plane (latitude and longitude, with 6 decimal places).
   - Radius of the flight airspace plane (in meters, with 2 decimal places).
   - Flight altitude (in meters, with 2 decimal places).

4. Unlock date: Enter the unlock date according to the valid permit. The date is recommended to be accurate to day/hour/second.
5. Aircraft S/N (Serial number): Multiple serial numbers can be applied at once.
6. Autel account of UAS operator: Multiple accounts can be applied at once.

Log in to the official website of Autel Robotics at www.autelrobotics.com/service/noflight/, enter the relevant information, and complete the waiver application.
After the unlocking application is approved, you will obtain an unlock permit. The permit contains the aircraft serial number, UAS operator account, and unlocked zone (including the validity period).

Tip

- After the waiver application is submitted, it will be approved within 24 hours, and unlocking will be completed within 48 hours. Please make a reasonable flight plan in advance.

2.10 Altitude and Distance Limits

The altitude limit is the maximum flight altitude of the aircraft, while the distance limit is the maximum radius (distance from the take-off point) that the aircraft can fly.
You can set altitude and distance limits in the Autel Enterprise App to ensure the safe flight of the aircraft. For more information, see "6.5.1 Flight Control Parameter Setting" in Chapter 6.

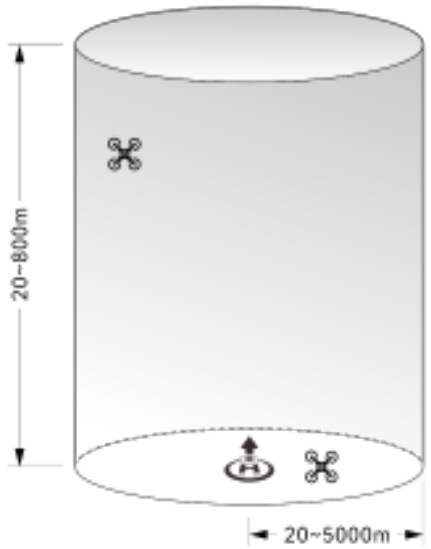

Fig 2-4 Diagram of altitude and distance limits

Tip

- In the Autel Enterprise App, the altitude limit should be set between 20 meters and 800 meters, and the distance limit should be set between 20 meters and 5000 meters. During actual flights, the maximum altitude limit should be set no greater than the maximum altitude specified by local laws and regulations. For example, Chinese mainland, the United States, and the European Union all limit the maximum flight altitude of aircraft

to no more than 120 meters or 400 feet.
- When setting the maximum altitude limit, consider the reasonableness of the RTH altitude, which should not exceed the maximum altitude limit.
- The RTH altitude should be set higher than the altitude of the highest obstacle in the flight area.

2.11 Aircraft Calibration

2.11.1 Compass Calibration

The compass (magnetometer) has been calibrated at the factory, and no user calibration is required under normal conditions.
If the Autel Enterprise App prompts that the compass displays an error message, the flight direction of the aircraft is inconsistent with the control input direction of the remote controller, or the flight location deviates too much from the calibration location, please follow the steps below to calibrate it.

Important

- The compass is very easy to be affected by electromagnetic interference. Electromagnetic interference may lead to compass errors and degradation in flight quality.
- Please choose an open outdoor area for calibration.
- During calibration, please stay away from areas with a strong magnetic field or large metal objects, such as magnetic ore mines, parking lots, construction areas with underground reinforcing steel bars, underground areas, or locations near overhead power transmission lines.
- During calibration, do not carry ferromagnetic materials or metal objects on your person, such as mobile phones and watches.
- During the calibration process, please stay away from charged objects and make the aircraft fly 1.5 meters above the ground.
- During the calibration process, please do not turn off the power of the aircraft or start the motors.

Table 2-4 Compass Calibration

Step	Operation	Diagram
1	After turning on the aircraft and the remote controller, tap "" > "" > "" > "Compass Calibration" > "Start Calibration" in the main interface of the Autel Enterprise App. When the calibration process begins, the rear arm light of the aircraft turns yellow and blinks.	
2	Hold the aircraft to keep it in a horizontal direction. Rotate the aircraft 360° horizontally until the rear arm light of the aircraft turns green and blinks.	
3	Hold the aircraft to keep it in a vertical direction with the nose up. Rotate the aircraft 360° horizontally until the rear arm light of the aircraft turns green and blinks.	

	Hold the aircraft to keep it with the nose to the left and the side down.	
4	Rotate the aircraft 360° horizontally until the rear arm light of the aircraft turns green and is always on.	

Tip

- Please perform the calibration steps according to the tips shown in the compass calibration interface of the Autel Enterprise App.
- If the calibration fails, the rear arm light of the aircraft will turn red and is always on, and the above steps should be repeated at this time.
- If the compass still cannot work properly after the calibration, fly the aircraft to other places and calibrate the compass again.

2.11.2 IMU Calibration

The IMU (Inertial Measurement Unit) of the aircraft has been calibrated at the factory, and no user calibration is required under normal conditions.
If the acceleration and angular velocity of the aircraft are abnormal, please follow the steps below to calibrate it.

Important

- Please place the aircraft according to the tips shown in the IMU calibration interface of the Autel Enterprise App, and keep the aircraft in a static state.
- Please place the aircraft on flat ground, and do not move, shut down, or restart the aircraft during the calibration process.
- During IMU calibration, the gimbal will not work.

Table 2-5 IMU Calibration

Step	Operation	Diagram
1	After turning on the aircraft and the remote controller, tap "⊞" > "⚙" > "◐" > "IMU Calibration" > "Start Calibration" in the main interface of the Autel Enterprise App. When the calibration process begins, the rear arm light of the aircraft turns yellow and blinks.	
2	Fold up the arms and place the aircraft flat on the ground until the rear arm light of the aircraft turns green and blinks.	
3	Turn the aircraft over 180° and lay the aircraft facing up until the rear arm light of the aircraft turns green and blinks. Please pay attention to protecting the upward-looking camera lens.	

4	Put the left side of the aircraft flat on the ground until the rear arm light of the aircraft turns green and blinks.	
5	Put the right side of the aircraft flat on the ground until the rear arm light of the aircraft turns green and blinks.	
6	Fold the arms, turn the aircraft nose up, and lay it on the leveled surface until the rear arm light of the aircraft turns green and is always on. Be careful not to bump the rear camera lens.	

Tip

- If the calibration fails, the rear arm light of the aircraft will turn red and is always on, and the above steps should be repeated at this time.

2.11.3 Gimbal Calibration

The gimbal of the aircraft has been calibrated at the factory, and no user calibration is required under normal conditions.
If the rotation angle of the gimbal is abnormal, please follow the steps below to calibrate it.

Table 2-6 Gimbal Calibration

Step	Operation	Diagram
1	Place the aircraft on a flat ground. After turning on the aircraft and the remote controller, keep the aircraft in a static state. In the main interface of the Autel Enterprise App, tap “” > “” > “” > “Gimbal Calibration” > “Start Calibration”.	
2	Wait for the calibration progress bar to reach 100%. When “Calibration Successful” is displayed on the screen, the gimbal is successfully calibrated.	

2.12 Emergency Stop Propellers During Flight

During flight, if the motors of the aircraft experience power damage or failure (e.g., damaged or missing propellers and motor failure) that makes the aircraft out of control, you can enable the "Emergency Stop Propellers During Flight" function. At the same time, you need to manipulate the dual command sticks on the remote controller inward or outward to forcibly stop propeller rotation and allow the aircraft to descend freely for an emergency landing. This can reduce the potential damage to property and harm to ground personnel caused by aircraft malfunctions.

In the event of an aircraft malfunction, you should first attempt to manipulate the command sticks to move the aircraft away from crowds or buildings and lower the altitude and horizontal speed of the aircraft before enabling the emergency propeller stop function. For how to enable this function, see “6.5.7 More” in Chapter 6.

Important

- If you stop the propellers when the aircraft has an initial velocity, the aircraft will fall along a parabolic trajectory. If the trajectory is unpredictable, do not stop the propellers.
- After completing an emergency landing, contact Autel Robotics promptly for a power

system inspection and maintenance.

2.13 Mid-flight Sensing

Automatic Dependent Surveillance-Broadcast (ADS-B) is a manned aircraft monitoring technology that allows a manned aircraft to determine its position using satellite navigation systems and broadcast the information regularly, making the aircraft trackable. Other aircraft can receive the information to achieve attitude awareness and autonomous avoidance.
The EVO Max series aircraft is equipped with ADS-B receivers that can receive flight information broadcast by ADS-B transmitters that support the 1090ES and UAT standards within a range of 10 kilometers. By analyzing the received flight information, the position, altitude, course, and speed of the manned aircraft will be obtained, and the obtained information will be compared with the current position, altitude, course, and speed information of the aircraft. The Autel Enterprise App will provide real-time risk warnings, reminding users to plan flight paths rationally and pay attention to avoidance.

Important

- The aircraft has been pre-configured with the ADS-B receiver hardware at the factory. The mid-flight sensing function will be available in subsequent versions. Please update the aircraft firmware in a timely manner.
- Operation path: Tap "> " > " > "Safety" > "Receive ADS-B" in the main interface of the Autel Enterprise App, and follow the on-screen instructions to perform relevant operations. For more information, see "6.5.7 More" in Chapter 6.

2.14 Direct Remote Identification

The Direct Remote Identification (DRI) system allows for uploading the registration number (Remote ID) of a UAS operator to the system. During flight, it can actively broadcast some non-sensitive data to mobile devices within its broadcast range in real time via an open, documented transmission protocol. The non-sensitive data includes the registration number of the operator, the unique serial number, timestamp, geographical location, altitude above ground level or take-off point, route measured clockwise from true north, and ground speed of the unmanned aircraft, and the geographical location of the operator (if available, otherwise the geographical location of the take-off point). This system not only effectively controls potential risks to public safety posed by unmanned aircraft during flight but also provides effective information and data tools for unmanned aircraft flight regulation.
The EVO Max series aircraft supports the DRI system and uses Wi-Fi for broadcasting. To enable the DRI system, configure it in the Autel Enterprise App.

Tip

- Operation path: On the main interface of the Autel Enterprise App, tap " > " > " > "

"Safety" > "Remote ID", and follow the on-screen instructions to perform relevant operations. For more information, see "6.5.7 More" in Chapter 6.

2.15 Standard Flight Operation Process

2.15.1 Pre-Flight Checklist

Before each flight, please follow the steps below to perform a comprehensive pre-flight check to ensure flight safety:

- Make sure that the batteries of the aircraft and remote controller are fully charged, and the battery of the aircraft is installed in place, with the unlock button of the battery in a lock state.
- Make sure that the propellers of the aircraft are installed tightly without damage or deformation, the motor and propellers are clean and free of foreign objects, and the propellers and arms are fully extended.
- Make sure that the vision cameras of the aircraft, the lens of the gimbal, and the lens of the auxiliary light are free from foreign objects, dirt, or fingerprints, have their protective stickers removed, and are not blocked by loads or other accessories on the fuselage.
- Make sure that the protective cover of the gimbal has been removed and that the three-axis movement of the gimbal is in a normal state.
- Make sure that the microSD card is inserted into the aircraft, and that the rubber protective covers on the microSD card slot and PSDK interface are closed firmly. Otherwise, the protection performance of the aircraft will be affected.
- Make sure that the antenna of the remote control is unfolded.
- Place the aircraft in an open and flat area outdoors and make sure that there are no obstacles, buildings, trees, etc. around. You should stand at least 5 meters away from the tail of the aircraft when operating.
- Make sure that after the aircraft is powered on, the aircraft and the remote controller are connected, and the aircraft motors, gimbal, and camera are working normally.
- Make sure that the aircraft, remote controller, etc. have been upgraded to the latest version as prompted.
- Make sure that all warnings and errors displayed on the Autel Enterprise App are handled.
- Enter the Autel Enterprise App setting page to set the flight control parameters, obstacle avoidance system, stick mode, and other related flight safety parameters, and be familiar with the flight operation, so as to ensure that the parameter settings meet your own needs and guarantee flight safety.
- If multiple aircraft are flying at the same time, please keep an appropriate air distance to avoid any accidents.

2.15.2 Basic Flight Process

The aircraft provides three command stick modes: Mode 1, Mode 2, and Mode 3. Each mode controls the aircraft differently. The default mode is Mode 2. You can switch the mode in the Autel Enterprise App according to your control habit (For how to switch the mode, see "6.5.3 RC Settings" in Chapter 6). The following is the basic operation of aircraft flight:

1. Please refer to "2.15.1 Pre-Flight Checklist" to complete the preparations before flight.
   - Place the aircraft in an open and flat area outdoors and make sure that there are no obstacles, buildings, trees, etc. around.
   - Press and hold the battery power button for 3 seconds to turn on the power of the aircraft, and wait for the rear arm light to turn green and blinks slowly (indicating that the current status is normal).
   - Long press the power button of the remote controller for 3 seconds to turn on the remote controller.
   - Stand at least 5 meters away from the rear arms of the aircraft.
2. Please refer to "4.10.3 Starting/Stopping the Aircraft Motor" in Chapter 4 to use the remote controller to start the aircraft and take off.
3. Please refer to "4.10.1 Stick Modes" and "4.10.2 Setting Stick Mode" in Chapter 4 to control the aircraft carefully.
4. Please refer to "4.10.3 Starting/Stopping the Aircraft Motor" in Chapter 4 to land the aircraft, and then turn off the motors.

Chapter 3 Aircraft

3.1 Aircraft Activation

When unboxing the product for the first time, you need to activate the EVO Max series aircraft before using it. By default, the aircraft is pre-paired with the remote controller at the factory. After turning on the aircraft and the remote controller, you will see an activation prompt in the Autel Enterprise App. Please follow the steps in the Autel Enterprise App to activate the aircraft.

Important

- Make sure that the remote controller is connected to the Internet before starting the activation process. Otherwise, activation may fail.
- If activation fails, please contact Autel Robotics After-Sales Support for assistance.
- For how to pair the aircraft with the remote controller, see "4.9 Frequency Pairing With the Remote Controller" in Chapter 4.

3.2 Aircraft Components

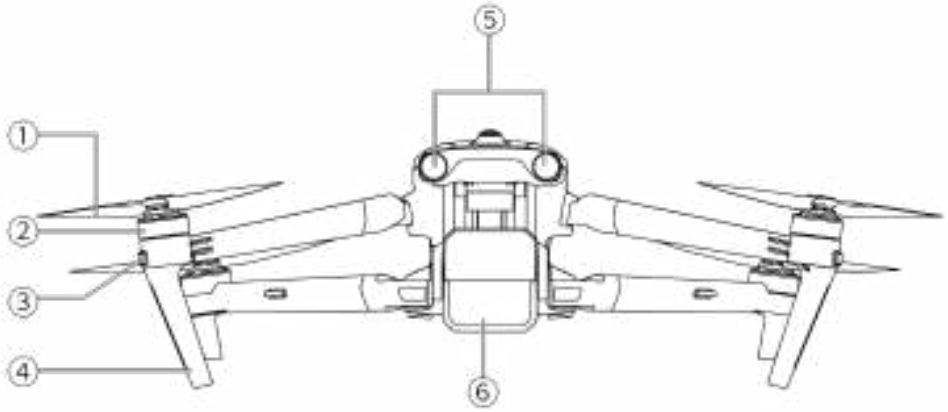

Fig 3-1 Aircraft Front View

Table 3-1 Aircraft Front View Details

No.	name	Description
1	Propeller	Rotates in the air to generate thrust to propel the aircraft forward.
2	Motor	Used to drive the propeller to rotate.
3	Front Arm Light	Used to identify the nose direction of the aircraft.

4	Landing Gear	Used to support the aircraft to avoid damage to the bottom of the fuselage.
5	Forward Visual Sensing System	Used to sense the obstacles ahead and avoid the aircraft from colliding with them.
6	Gimbal Camera	Integrates multiple sensors for stable shooting or measurements during flight.

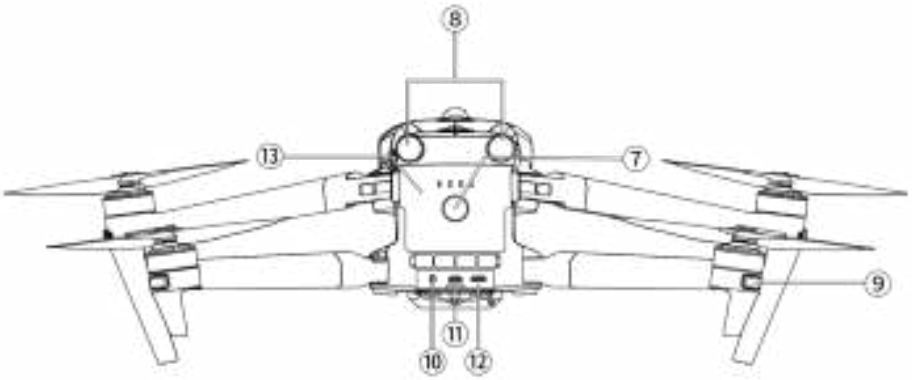

Fig 3-2 Aircraft Rear View

Table 3-2 Aircraft Rear View Details

No.	name	Description
7	Power button	Press and hold the power button for 3 seconds to start the aircraft.
	Pairing Button	Quickly press the power button twice to enter pairing mode.
8	Rear Visual Sensing System	Used to sense the obstacles in the rear and avoid the aircraft from colliding with them.
9	Rear Arm Light	Used to display the current flight status of the aircraft.
10	microSD Card Slot	For inserting a microSD card.
11	External SSD Interface	For connecting an external SSD.
12	USB-C Interface	Used to connect to a computer for firmware updates or debugging.
13	Smart Battery	Used to provide energy for aircraft operation.

⚠ Warning

- The USB-C interface of the aircraft cannot be used for charging. Do not connect the included remote controller charger. For how to charge the aircraft, see "5.2.5 Charging the Smart Battery" in Chapter 5.

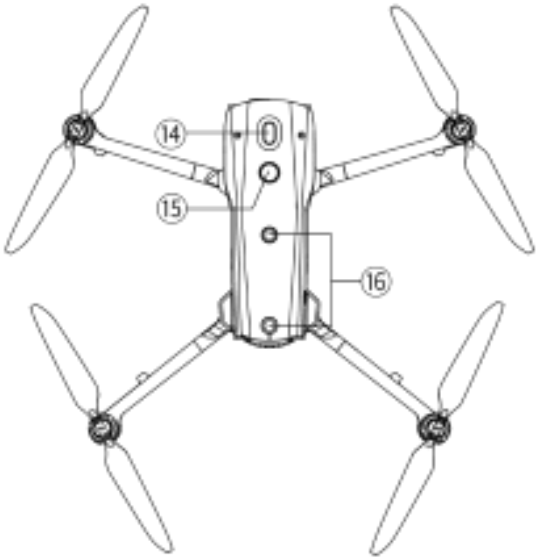

Fig 3-3 Aircraft Top-Down View

Table 3-3 Aircraft Top-Down View Details

No.	name	Description
14	Mount Extension Interface	Additional mounts can be added to the aircraft fuselage through the extension interface, such as speakers, spotlights, and RTK modules.
15	Strobe	Emits high-intensity strobe lights to indicate the position of the aircraft at night to avoid air traffic accidents.
16	Upward Visual Sensing System	Used to sense obstacles above, and to the left and right of the aircraft and avoid collisions.

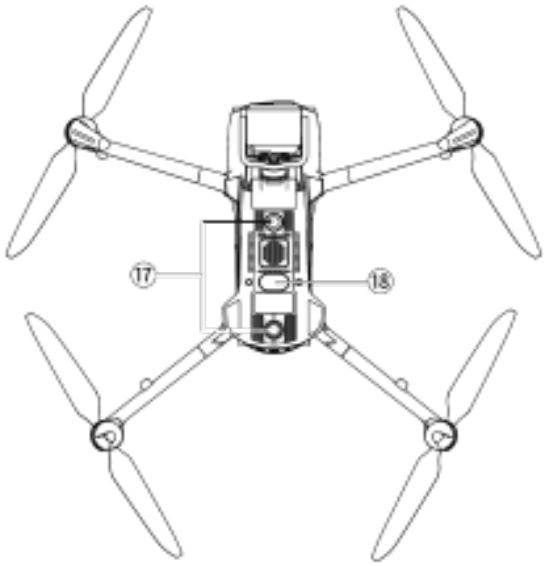

Fig 3-4 Aircraft Bottom-Up View

Table 3-4 Aircraft Bottom-Up View Details

No.	name	Description
17	Downward Visual Sensing System	Used to sense obstacles below, and to the left and right of the aircraft and avoid collisions.
18	Auxiliary Light	An LED auxiliary light. It is used to enhance the ambient brightness of the landing area during the landing process, improve downward visual sensing performance, and ensure the safe landing of the aircraft.

⚠ Warning

- There is a rubber protective cover in the interface area on the rear side of the fuselage to protect the microSD card slot, external SSD interface, and USB-C interface. Please make sure that the protective cover is closed firmly during the flight.
- Do not disassemble the components that have been installed at the factory (except for the components explicitly permitted in the description in this manual), otherwise, the product warranty will be void.
- Please prevent the 4 millimeter-wave radars inside the fuselage from being blocked by foreign objects. The four millimeter-wave radars are located in the middle of the forward visual sensing system, the rear visual sensing system, the top shell of the fuselage, and near the fisheye lens at the bottom shell of the fuselage, respectively.

3.3 Propeller

Propellers are wearable parts that require regular maintenance and replacement to ensure the safe flight of the aircraft. The EVO Max series aircraft uses a quick-release propeller design, making it easy for you to replace them.

3.3.1 Replacing Propellers

The propellers are installed in the aircraft by default at the factory, and reinstallation is not required. If the propellers are damaged (e.g., broken or damaged blades), please replace them with new ones before a flight.

Tip

- Aircraft propellers are wearable parts. If needed, please purchase them from Autel Robotics.
- The propeller model is marked on the blade. You can check the model of a propeller at the edge of the blade near the propeller center shaft.
- Propellers cannot be installed on the wrong propeller mounts. Please carefully distinguish between propellers and mounts.
- Autel Robotics provides two spare propellers for each aircraft (with models CW and CCW, respectively). Please refer to the “Packing List” and packaging for details.

■ Detaching the Propellers

1. Press and hold the smart battery power button for 3 seconds to power off the aircraft.
2. First hold the motor on the arm below the propeller to prevent it from rotating, press down on the propeller center shaft firmly, and then turn it in the unlocking direction to detach the propeller.

■ Installing the Propellers

When installing the propellers, strictly follow the following instructions:

1. Make sure that the aircraft is powered off before installing the propellers.
2. The aircraft needs to be installed with two models of propellers, that is, CW and CCW, with two of each model. The CCW propellers have a white circle mark at the center shaft, while the CW propellers do not have this mark at the center shaft.
3. There are two types of propeller mounts on the front and rear arms of the aircraft. The mounts with a white circle mark at the center shaft are for CCW propellers, while the mounts without this mark are for CW propellers.
4. Place a propeller on the corresponding propeller mount. Make sure that the buckle at the center shaft of the propeller aligns with the slot on the mount. Hold the motor on the arm below the propeller to prevent it from rotating, press down on the propeller center shaft firmly, and then turn it in the locking direction marked on the center shaft to secure the propeller in place.

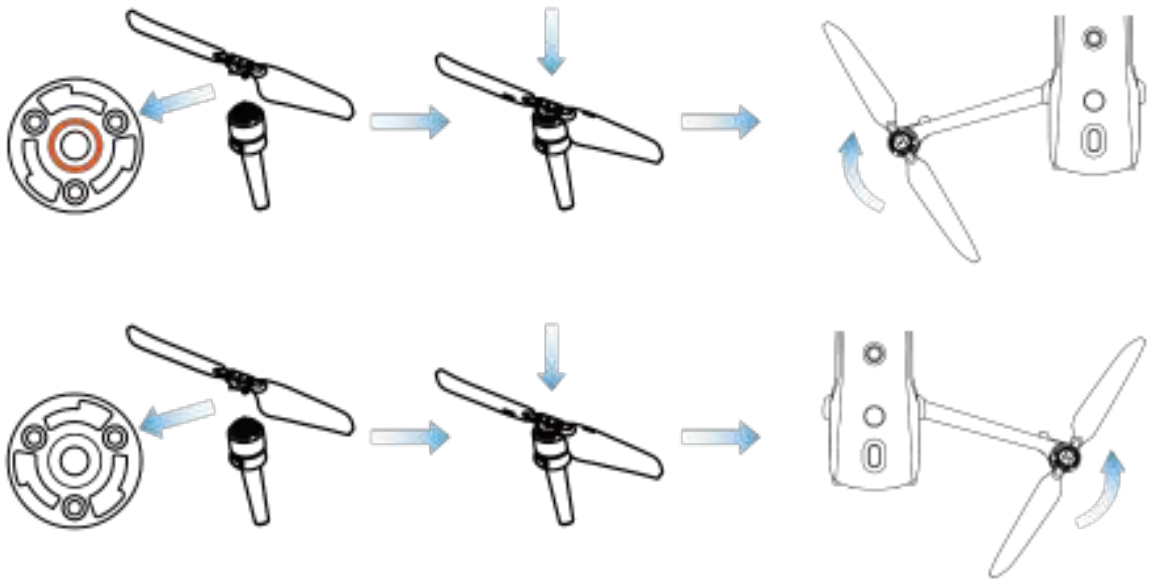

Fig 3-5 Install the Propellers

Table 3-5 Propeller Installation Details

Propeller Model	CCW (White circle on the center shaft)	CW (No white circle on the center shaft)
Installation Area	Mounts with a white circle mark	Mounts without white circle mark
Lock/Unlock	Lock orientation: Turn the propeller this way: to tighten it. Unlock orientation: Turn the propeller this way: to remove it.	

⚠ Warning

- The propellers can rotate at a maximum speed of 8000 RPM. Please operate with caution.
- Before each flight, make sure that all propellers are in good condition. If there are aged, damaged, or deformed propellers, please replace them before the flight.
- Before each flight, make sure that all propellers are mounted correctly and securely.
- Please use the propellers provided by Autel Robotics. Do not mix propellers of different models.
- Before replacing propellers, make sure that the aircraft is powered off.
- Propeller edges are sharp. When replacing propellers, it is recommended to wear protective gloves.
- Stay away from rotating propellers or motors to avoid injuries.
- Before testing the aircraft on the ground, make sure that the propellers are removed.

3.3.2 Storing Propellers

After using the aircraft, fold the arms as shown below and store the propellers in the rugged case.

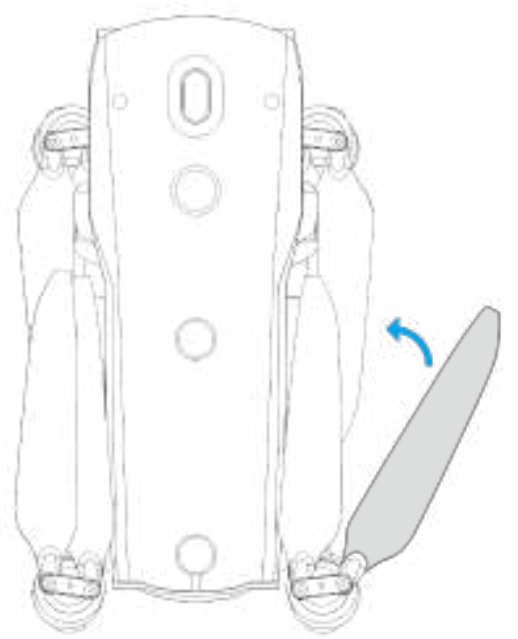

Fig 3-6 Store the Propellers

3.4 Arm Light

There is an LED indicator at the end of each arm of the aircraft. After the aircraft takes off, the front arm lights will blink periodically, which can help you identify the direction of the aircraft's nose; the rear arm lights will display the current flight status of the aircraft.

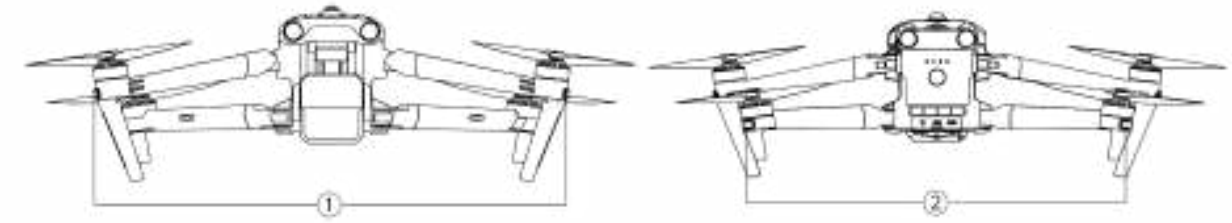

Fig 3-7 Arm Light

Table 3-6 Arm Light Details

Mode	Front Arm Light	Rear Arm Light
GNSS Mode ATTI Mode	During flight, the front arm lights will blink green periodically following a pattern of (1s on/1s off) to help identify the nose direction.	During flight, the rear arm lights will blink alternately in a cycle of (green light on for 1s / red light on for 1s) to help identify the tail direction.

Table 3-7 Rear Arm Light Status Details

Indicator status (R: red G: green Y: yellow)	Definition
Normal	
R– Ultra-fast Blinking /Fast Blinking →Y- Fast Blinking	System Self-Test
G– Slow Blinking	Aircraft is in GNSS Mode / Visual Positioning Mode
Y– Slow Blinking	Aircraft is in ATTI mode
Calibration	
Y– Slow Blinking	Magnetometer/IMU Calibration Data Collection
G– Slow Blinking	Magnetometer/IMU Calibration Goes to the Next Step
G– Always On	Magnetometer/IMU Calibration Successful
R– Always On	Magnetometer/IMU Calibration Failed
Warning	
Y– Fast Blinking	Remote Controller Not Connected to Aircraft
R– Slow Blinking	Low battery warning/ Illegal Battery
R– Fast Blinking	Critical low battery warning
R– Always On	IMU Abnormal
RY-Alternate Slow Blinking	Magnetometer Abnormal

- Slow Blinking: blinks once every 2s (0.5s on/1.5s off).
- Fast Blinking: blinks twice per second.
- Ultra-fast blinking: blinks 5 times per second.

3.5 Strobe

The aircraft is equipped with a strobe at the top of the fuselage to help identify the aircraft when flying at night. You can manually turn the strobe on or off in the Autel Enterprise App.

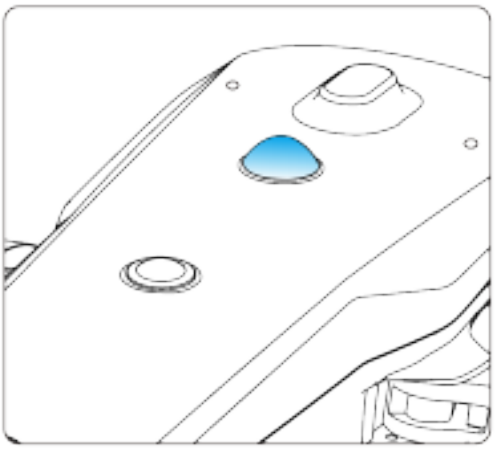

Fig 3-8 Strobe

Tip

- For how to turn the strobe on or off, see "6.4 Shortcut Toolbar" and "6.5.7 More" in Chapter 6.

Warning

- Do not look directly at the strobe while they are on to avoid vision damage caused by strong light.

3.6 Auxiliary Bottom Light

The aircraft is equipped with auxiliary bottom lights (LED auxiliary lights) at the bottom of the fuselage. The lights are used to assist the downward visual sensing system when the aircraft is landing in weak light environments, so as to ensure better visual positioning performance and enhance the landing safety of the aircraft. You can manually turn the bottom LED auxiliary lights on or off in the Autel Enterprise App.

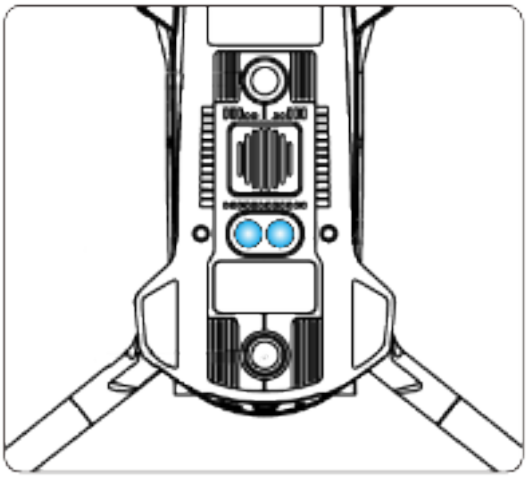

Fig 3-9 Auxiliary Light

Tip

- For how to turn the auxiliary bottom lights on or off, see "6.4 Shortcut Toolbar" and "6.5.7 More" in Chapter 6.

Warning

- When the auxiliary bottom lights are set to automatic mode, they will turn on automatically at an altitude of 3 meters above the ground when the aircraft is landing and the ambient light is insufficient, and they will turn off automatically after a successful landing.

3.7 Camera

- The EVO Max 4T aircraft is equipped with the Fusion 4T Gimbal, which integrates a high-magnification zoom camera, allowing you to clearly shoot vehicles and boats up to 2 kilometers away.
- The EVO Max 4N aircraft is equipped with the Fusion 4N Gimbal, which integrates a super-starlight night vision camera and has outstanding shooting performance under low-illuminance environments.
- Both gimbal cameras integrate a wide angle camera, a laser rangefinder, and an infrared thermal imaging camera and provide capabilities such as target thermal imaging, positioning, and ranging for flight operations, enhancing the flying experience in all-day operations.

3.7.1 Camera Structure

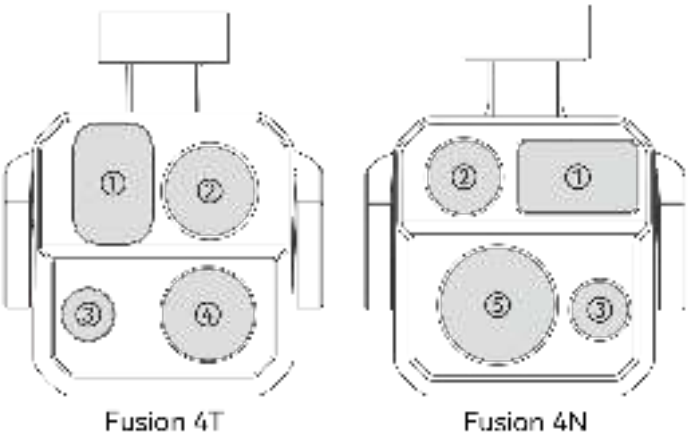

Fig 3-10 EVO Max Series Aircraft Camera

Table 3-8 EVO Max Series Aircraft Camera Details

No.	name	Description
1	Laser Rangefinder	The distance is accurately determined by measuring the time

		from the start of the laser emission to the time when the laser is reflected from the target. Measuring range: 5-1200 meters.
2	Infrared Thermal Imaging Camera	The infrared thermal imaging camera is used for radiometric measurement and night vision, which can monitor the temperature distribution of the measured target in real time, so as to judge the state of the target. Radiometric temperature range: -20°C ~ +150°C (high gain mode) and 0°C ~ + 550°C (low gain mode).
3	Wide Angle Camera	The wide angle camera is used to capture images with a larger field of view within a shorter shooting distance. 1/1.28" CMOS, 50 million effective pixels, and 85° field of view.
4	Zoom Camera	The zoom camera is used to shoot distant scenes, making the distant scenes clearer. 1/2" CMOS, 48 million effective pixels, 10x continuous optical zoom, and 160x hybrid zoom.
5	Night Vision Camera	The night vision camera is used for clear imaging in low-illuminance environments (such as nighttime). 0.0001 Lux ambient illumination recognition and 1920×1200 resolution.

Warning

- Do not point the infrared thermal imaging camera at intensive energy sources such as the sun, lava, laser beams, and molten iron, to avoid damage to the infrared detector.
- The temperature of the observation target should be less than 600 °C. Observing objects with temperatures above this limit may result in damage to the infrared detector.
- The laser rangefinder is a Class 3R laser product that emits laser radiation. Avoid direct exposure to the eyes when in use.

3.7.2 Camera Operations

Remote Controller Control

- Right dial wheel: Used to adjust the zoom factor of the selected camera. Turn left to reduce the zoom factor, and turn right to increase the zoom factor.
- Video recording button: Press the button to start/end video recording.
- Shooting button: Press the button to take photos.

Tip

- For the control operations of the remote controller, see “4.1.1 Remote Controller Components” in Chapter 4.

■ Autel Enterprise App Control

For the control operations and the functions related to the camera in the Autel Enterprise App, see "6.8 Camera Interfaces" in Chapter 6.

3.8 Gimbal

The EVO Max series aircraft is equipped with a three-axis stabilized gimbal with a high-precision motor structure, which can ensure stable camera shooting when the aircraft is flying.

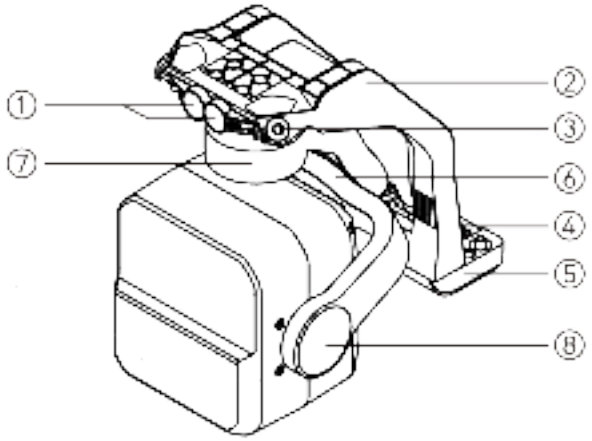

Fig 3-11 Gimbal Structure

Tip
● Please be aware that, except for differences in lens layout, the structure of the Fusion 4T Gimbal and Fusion 4N Gimbal is the same or similar.

Table 3-9 Gimbal Structure Details

No.	name	Description
1	Cylindrical Holes	The two cylindrical holes at the front of the gimbal are used to fix one side of the gimbal to the two fixed pins in the aircraft nose gimbal compartment.
2	Dampener Mount	Used to support dampeners and gimbal cameras, etc.
3	Dampener	Used to buffer the vibration of the gimbal.
4	Connector	The connector of the gimbal is connected to the connector slot at the bottom of the aircraft fuselage.
5	Connector Cover	The protective cover above the connector is used to fix the other side of the gimbal to the bottom of the aircraft fuselage.
6	Roll Axis Motor	Used to control the moving range of the gimbal to roll left or right (mechanical range of Fusion 4T: -45° ~ +45°; mechanical range of Fusion 4N: -50° ~ +50°).

7	Yaw Axis Motor	Used to control the moving range of the gimbal to rotate left or right with its own axis (mechanical range: -45° ~ +45°).
8	Pitch Axis Motor	Used to control the moving range of the gimbal to rotate up or down (mechanical range: -135° ~ +45°, controllable movement range: -90° ~ +30°).

3.8.1 Gimbal Mechanical Rotation Range

The mechanical rotation ranges of the pitch, yaw, and roll axes of the gimbal are shown below.

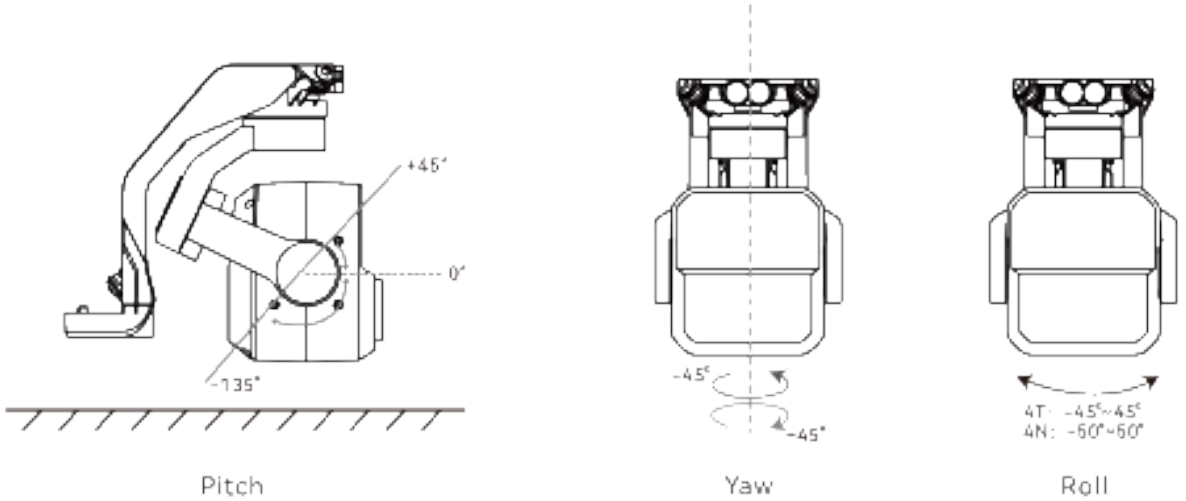

Fig 3-12 Mechanical Rotation Range of the Gimbal of the EVO Max Series Aircraft

Note

- You can control the rotation range of the gimbal pitch, ranging from -90° to 30°. For more setting details, see "6.5.6 Gimbal Settings" in Chapter 6.

3.8.2 Gimbal Operations

■ Remote Controller Control

- Left dial wheel: Used to adjust the gimbal pitch. Turn left to rotate the gimbal down, and turn right to rotate the gimbal up.
- Custom keys C1/C2: After setting the C1 or C2 key to "Gimbal Pitch Recenter/45°/Down", you can press the key to switch the gimbal angle.

Tip

- For the control operations of the remote controller, see "4.1.1 Remote Controller Components" and "4.11.1 Custom Keys C1 and C2" in Chapter 4.

■ Autel Enterprise App Control

For the gimbal control operations in the Autel Enterprise App, see "6.8.1 Camera Function Area" in Chapter 6.

⚠ Warning

- When the aircraft is not in use, especially when the aircraft is being transferred or stored, be sure to use the protective cover of the gimbal to fix the gimbal, so as to avoid damage to the gimbal camera due to accidental rotation or bumping.
- Please remove the protective cover of the gimbal before turning on the gimbal, otherwise, it may cause damage to the gimbal motor and circuit.
- When turning on the power switch of the aircraft, the gimbal will automatically rotate to perform self-check and calibration, please make sure there is no object near the gimbal to hinder its movement.

3.8.3 Replacing the Gimbal

The EVO Max series aircraft has a removable gimbal design, allowing you to easily replace the gimbal to meet your flight needs in various scenarios.

Important

- Please follow the instructions below to replace the gimbal, as improper replacement may cause damage to the gimbal or poor contact with the gimbal interface.
- Do not replace the gimbal frequently. The gimbal connector is a precision element, and frequent plugging and unplugging may result in poor contact between the aircraft and the gimbal.
- Please use the gimbal model specified by Autel Robotics for replacement. Incompatible gimbals may cause damage to the aircraft.

⚠ Warning

- Do not attempt to remove or mount the gimbal when it is powered on. Wait for 15 seconds after powering off the aircraft (the internal capacitor is fully discharged) before removing or mounting the gimbal.
- When turning the aircraft upside down to remove or mount the gimbal, please protect the lens at the back of the aircraft fuselage to avoid scratches.

■ Removing the Gimbal

1. Place the aircraft on a level surface with the bottom of the fuselage facing up.
2. Use a Phillips 2.0 screwdriver to loosen the two anti-loosening screws securing the connector cover.
3. Slightly lift the connector cover and slide it back and up to take out the gimbal.

⚠ Warning

- When removing the gimbal, do not forcefully pull the gimbal out, as this may cause damage to the gimbal or camera. You should hold the gimbal dampener mount to remove the gimbal.

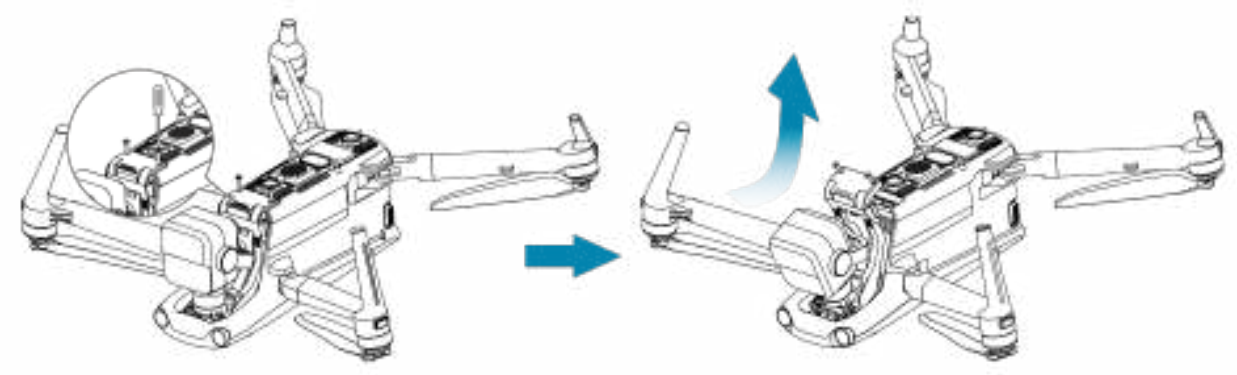

Fig 3-13 Removing the Gimbal

■ Mounting the Gimbal

1. After aligning the cylindrical hole on the front end of the gimbal with the two fixed pins in the aircraft nose gimbal compartment, push and slide the gimbal forward until the connector cover is aligned with the connector slot in the aircraft.
2. Gently push down the connector cover to the bottom, so that the connector under the connector cover is inserted into the connector slot, and the connector cover needs to be flush with the bottom of the aircraft.
3. Use a Phillips 2.0 screwdriver to partially tighten the two anti-loosening screws into the two fixing holes on the connector cover. After ensuring that the connector is perfectly aligned with the connector slot, fully tighten the two anti-loosening screws to secure the connector cover.
4. Press and hold the battery power button for 3 seconds to power on the aircraft. If the connector cable of the gimbal is connected correctly, the gimbal will automatically rotate the camera to perform a self-test.

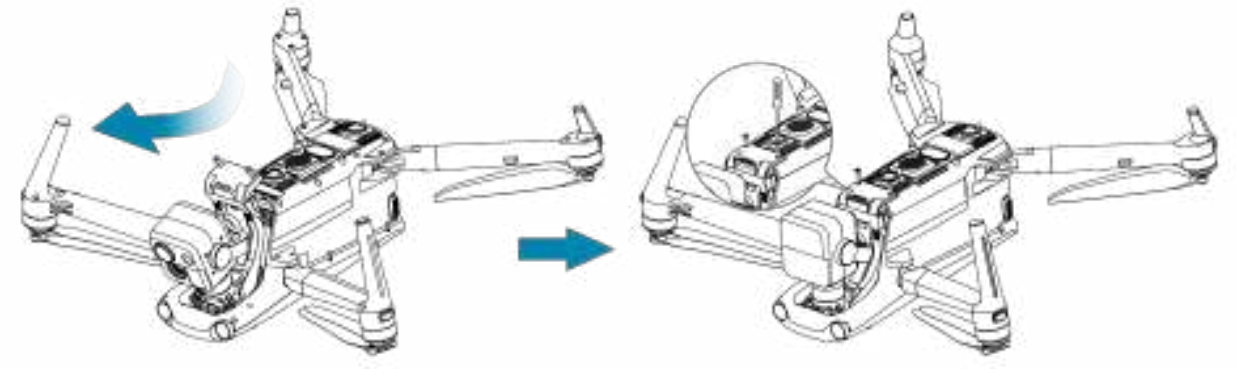

Fig 3-14 Mounting the Gimbal

Important

- Please make sure that the connector cover of the gimbal camera is aligned with the

connector slot at the bottom of the fuselage, otherwise, it will affect the connection between the gimbal and the aircraft.

⚠ Warning

- After mounting the gimbal to the aircraft, please make sure that all parts are fully fixed to avoid loss due to functional failures caused by loose assembly of the gimbal during flight.

3.9 Flight Control System

The EVO Max series aircraft achieves stable and convenient flight control through its built-in intelligent flight control system. The system supports a number of advanced functions, including auto-return, failsafe, visual positioning system, etc.

Table 3-10 Flight Control System

Module	Description
IMU	A three-axis gyroscope and a three-axis accelerometer measure acceleration and angular velocity.
Compass	Measures the geomagnetic field and provides reference information on the aircraft heading.
GNSS receiver	Receives global satellite navigation signals to measure longitude, latitude, and altitude.
Barometer	Measures atmospheric pressure and is used to determine the altitude of the aircraft.
Visual Sensing System	Provides the aircraft with 720° obstacle awareness around the fuselage.
Millimeter Wave Radar	Provides the aircraft with all-day and all-weather obstacle avoidance capabilities.

3.9.1 Flight Status

Depending on the availability of GNSS signals and flight conditions, the aircraft can automatically switch between three modes.

Table 3-11 Flight Status

Mode	Description
GNSS Mode	GNSS mode is activated when the aircraft detects an appropriate GNSS signal. In GNSS mode, if the obstacle avoidance system is turned on, the system will provide auxiliary information to more accurately locate and avoid obstacles, provide stable and smooth

	flight control, and support auto-return, failsafe, and other safety functions.
Visual Positioning Mode	When the aircraft is in the visual positioning mode, and the GNSS signal detected is not strong enough to activate GNSS mode, and it meets certain environmental and altitude requirements (ensure that the surrounding environment is well-lit, the ground texture is clear, and the altitude of the aircraft must be within the observation range of the visual sensing system), the visual positioning mode will be activated.
ATTI Mode (Attitude Mode)	When there is no GNSS signal and the environment and altitude cannot meet the requirements of the visual sensing system, that is, when there is no GNSS signal and visual positioning failure at the same time, the ATTI mode will be activated. In this mode, the obstacle avoidance system is disabled, and the aircraft only controls the altitude through the barometer.

⚠ Warning

- If you have not fully mastered the flight control of the aircraft and the aircraft is in ATTI mode, please do not take off rashly.

3.9.2 Flight Modes

The aircraft has varying flight performance in different flight modes. You can set the flight mode of the aircraft in the Autel Enterprise App. For more information, see "6.3 Status Notification Bar" and "6.5.1 Flight Control Parameter Setting" in Chapter 6.

Table 3-12 Flight Modes

Flight Modes	Description
Slow	Forward, backward, left, and right: 3 m/s; Ascend: 3 m/s; Descend: 3 m/s.
Smooth	Forward, backward, left, and right: 10 m/s; Ascend: 5 m/s; Descend: 5 m/s.
Standard	Forward and backward: 15 m/s; Left and right: 10 m/s; Ascend: 6 m/s; Descend: 6 m/s.
Ludicrous	Forward: 23 m/s; Backward: 18 m/s; Left and right: 20 m/s; Ascend: 8 m/s; Descend: 6 m/s.

⚠ Warning

- If you have not fully mastered the flight control of the aircraft, it is not recommended for you to switch to Ludicrous mode.

- When flying close to the ground, it is recommended to switch to Slow mode for safety.
- When switching to Ludicrous mode, the obstacle avoidance function of the aircraft will become unavailable, and the aircraft will not automatically avoid surrounding obstacles during flight. Please pay attention to the surrounding environment when using it, and manually control the aircraft to avoid obstacles.
- When switching to Ludicrous mode, its flight speed is greatly improved compared with Standard mode, so the braking distance in this mode will be correspondingly extended. You should maintain a braking distance of at least 50 meters when operating the aircraft in this mode to ensure personal and flight safety.

3.9.3 Intelligent Flight Function

■ Accurate Landing

The accurate landing function uses the downward binocular visual sensing system of the aircraft to record the information at its take-off point. When the aircraft is returning to the home point or landing, vision algorithms are used to calculate the distance between the aircraft and the take-off point in real time so as to make sure that the aircraft successfully lands at the take-off point.

■ Landing Protection

The landing protection function uses the downward visual sensing system of the aircraft to create a depth image, then calculate the flatness and angle of the depth image to detect whether the surface is flat enough for a safe landing.

■ Intelligent Obstacle Avoidance

The intelligent obstacle avoidance function uses the combined observation results of the visual sensing system and the forward millimeter-wave radar sensing system of the aircraft to calculate the optimal flight path, achieving obstacle avoidance in multiple directions.

3.9.4 Hot Swap Battery

The EVO Max series aircraft supports hot-swappable batteries, which allows you to replace smart batteries without powering off the aircraft, thus avoiding waiting for rebooting. When performing a hot swap, it is recommended to replace the battery within 10 seconds to ensure that the new battery can be properly activated when powering on the aircraft.

Important

- Before performing a hot swap, please enable the "Hot Swap Battery" function in the Autel Enterprise App. For more information, see “6.5.5 Aircraft Battery” in Chapter 6.
- After you remove the battery during a hot swap, the aircraft will enter Low Power mode. In this mode, the aircraft is powered by its internal supercapacitor. Therefore, you should complete the battery replacement quickly.
- The battery replacement time may vary under different temperatures, typically ranging from 10 to 40 seconds. Hot swap operations in temperatures below -10°C may fail.

3.10 Installing the microSD Card

The aircraft comes with a 64 GB microSD card (pre-installed in the microSD card slot of the aircraft at the factory). If you want to replace it with a higher-capacity microSD card, please follow the steps below.

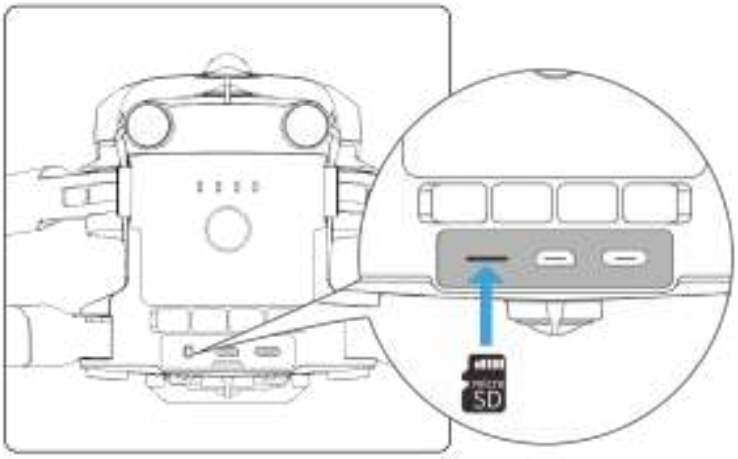

Fig 3-15 Installing the microSD Card

Tip

- The aircraft has built-in 128 GB storage space, with approximately 64 GB available due to system firmware and app updates.
- It is recommended that you prioritize using an external microSD card for storing the image data collected during flight to avoid running out of internal storage space, which will affect the flight safety of the aircraft.
- If you plan to shoot high-definition videos, we recommend using a Class 10, UHS-3, or higher microSD card.

Warning

- To prevent data loss, please turn off the aircraft before removing the microSD card.
- After installing the microSD card, close the rubber protective cover over the interface area promptly to avoid affecting the protective performance of the product.

3.11 Connecting to PC/MAC

To transfer photos and videos to a PC, MAC, or other devices, please use a data cable to connect to the device through the USB-C interface of the aircraft.

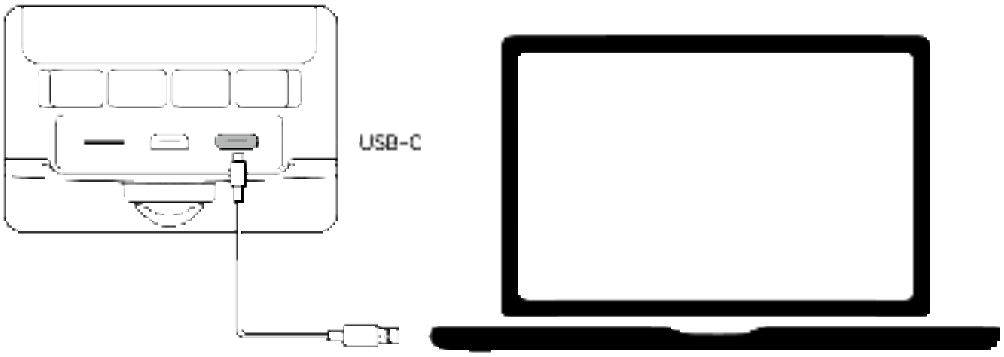

Fig 3-16 Connect to PC/MAC via Aircraft USB-C interface

3.12 Extension Interface

The top of the aircraft has a PSDK extension interface that uses the USB-C interface standard, which allows for additional functional mounts such as the RTK module.

Important

- Mounts for the EVO Max series aircraft are sold separately. If you need a mount, contact Autel Robotics official or authorized dealers.
- Do not plug a device that uses other USB-C interface standards into the PSDK extension interface, as it may damage the aircraft.
- Before flight, make sure that the mount is securely connected to the aircraft and the fixing screws on both sides are tightened.
- Pay attention to the battery level of the aircraft during flight. Mount operations consume the battery power of the aircraft, which will reduce the flight time of the aircraft.
- After removing a mount from the aircraft, be sure to close the rubber protective cover over the interface area. Otherwise, the protective performance of the aircraft will be affected.

Table 3-13 Compatible Mount List

Mount Information	RTK Module
Part Number (EAN)	6924991127222
Part Number (UPC)	889520207225
Manufacturer	Autel Robotics
Maximum Mount Dimension	73×49×46 mm
Maximum Mount Weight	28 g
Functional Compatibility Requirements	Aircraft firmware version: 1.5.0.75 Remote controller version: 1.4.0.55

Autel Enterprise version: 1.2.18

Tip

- Before using the above mount in the aircraft, make sure that the aircraft, remote controller, and Autel Enterprise App meet the functional compatibility requirements. If you use versions below those specified in the above requirements, the related functions cannot be enabled.
- When the aircraft is fully charged and is equipped with the RTK module, the hovering time will be extended to 37 minutes, and other aspects are not affected.

3.13 Protection Rating

Under controlled laboratory conditions, the EVO Max series aircraft (with smart batteries installed) can achieve an IP43 protection rating following IEC 60529 standards. The protection rating is not permanent and may degrade due to long-term wear and tear.

- It is not recommended to fly in rainy conditions. In case of rain during the flight, abort the flight and return to a safe location promptly.
- Before flight, make sure that the battery connector, battery compartment interface, battery surface, and battery compartment surface are dry and water-free before inserting the battery into the aircraft fuselage.
- After completing the flight, wipe off the rainwater on the aircraft fuselage before folding and storing the aircraft to prevent water from entering the aircraft and affecting its protective performance.
- Make sure that the battery connector and surface are dry and water-free before charging the battery.
- Damage caused by immersion in liquid is not covered by the warranty.

The aircraft does not have an IP43 protection rating in the following conditions:

- The aircraft is not installed with a battery or the battery is not properly installed.
- The rubber protective cover at the interface of the fuselage is not properly installed.
- There are other possible damage on the fuselage, such as shell cracks or waterproof adhesive failure.

Note

- Please strictly comply with the usage environment restrictions of the aircraft. Using the aircraft beyond specified conditions may lead to aircraft damage or safety incidents.
- The IP43 protection rating is not a universal feature of the aircraft and may require user customization.

3.14 Noise

The EVO Max series aircraft will generate a certain level of noise during operation. You should understand local noise pollution prevention regulations in advance and set an appropriate

flight altitude or safe distance to ensure that it does not disturb other individuals, groups, or organizations.

■ A-weighted sound power level

The EVO Max series aircraft has passed sound power test conducted by relevant third-party testing organizations with qualification. The results comply with the regulations concerning unmanned aerial vehicles in the European Union.

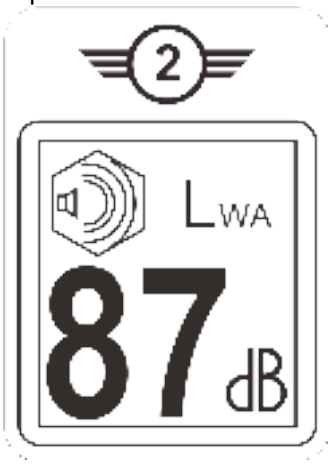

Fig 3-17 A-weighted sound power level of the EVO Max series

■ A-weighted sound pressure level

Measurement results for the EVO Max series aircraft, in accordance with the requirements of GB 42590-2023 in Chinese mainland, are provided below:

Table 3-14 Noise Measurements Results (normalized to 1 m from the aircraft)

Observation Points	Hover	Fly (1 m/s)
Ground Measure Point (Below)	70.0dB	74.3dB
Side Measure Point (Horizontal Plane)	72.2dB	70.2dB
Note: The measurement environment is an outdoor cement ground.		

Tip

- Before flight, please make sure to verify the noise restrictions in the flying area in advance to avoid any violation of local regulations regarding aircraft noise.

3.15 Autel SkyLink Image Transmission Function

The EVO Max series aircraft is equipped with Autel SkyLink 3.0 image transmission technology and has 4 image transmission antennas, with 2 channels of transmitting signals and 4 channels of receiving signals, so that the communication distance between the aircraft and the remote controller can reach up to 20 kilometers.

- It supports adaptive frequency hopping transmission of multiple frequency bands, selects the optimal channel according to the electromagnetic interference situation, and has strong anti-interference ability.
- The quality of real-time transmission reaches 1080p/60fps, and it has a high transmission bit rate of 64Mbps and low-latency transmission characteristics.
- The whole link data storage adopts the AES-128 encryption method to ensure that the communication data between end-to-end cannot be monitored.

Note

- The transmission data is based on the remote controller and comes from test data, and the test environment and conditions are different, and the data may be different.
- The transmission range is for reference only. During use, please pay close attention to the quality of the image transmission signal. When the image transmission signal is weak, reduce the flight radius in a timely manner. For more information, see "6.3 Status Notification Bar" in Chapter 6.
- Please note that the maximum communication distance of the included remote controller is 15 kilometers. To achieve a 20-kilometer communication distance with the aircraft, a ground device with stronger communication capabilities is required.

■ Information Of Image Transmission Frequency Bands for Aircraft

The image transmission frequency bands of the EVO Max series comply with regulatory requirements worldwide. The relevant certified frequency bands are listed in the table below.
In actual use, after power-on and paired the aircraft and the remote controller, the Autel Enterprise App in the remote controller will automatically determine the location based on the GNSS information received by the aircraft. It will then automatically select the radio communication frequency band that complies with local regulations for the specific country or region.

Tip

- After the aircraft is paired with the remote controller, the frequency bands between them will be automatically controlled by the Autel Enterprise App based on the geographical information of the aircraft. This is to ensure compliance with local regulations regarding frequency bands.
- Users can also manually select a legal video transmission frequency band. For detailed instructions, see "6.5.4 Image Transmission Settings" in Chapter 6.
- Before flight, please ensure that the aircraft receives a strong GNSS signal after powering on. This allows the Autel Enterprise App to receive the proper communication frequency band.
- When users adopt visual positioning mode (such as in scenarios without GNSS signals), the wireless communication frequency band between the aircraft and remote controller will default to the band used in the previous flight. In this case, it is advisable to power on the aircraft in an area with a strong GNSS signal, then start flight in the actual operational area.

Table 3-15 EVO Max Series Aircraft Global Certified Frequency Bands

Operating Frequency	Details	Certified Countries & Regions
2.4G	● BW=1.4M: 2403.5 - 2475.5 MHz ● BW=10M: 2407.5 - 2471.5 MHz ● BW=20M: 2412.5 - 2462.5 MHz	■ Chinese Mainland ■ Taiwan, China ■ USA ■ Canada ■ EU ■ UK ■ Australia ■ Korea ■ Japan ■ Russia
5.8G	● BW=1.4M: 5728 - 5847 MHz ● BW=10M: 5733 - 5842 MHz ● BW=20M: 5738 - 5839 MHz	■ Chinese Mainland ■ Taiwan, China ■ USA ■ Canada ■ EU ■ UK ■ Australia ■ Korea
5.7G	● BW=1.4M: 5652.5 - 5752.5 MHz ● BW=10M: 5655 - 5750 MHz ● BW=20M: 5660 - 5745 MHz	■ Japan
900M	● BW=1.4M: 904 - 926 MHz ● BW=10M: 909 - 921 MHz ● BW=20M: 914 - 916 MHz	■ USA ■ Canada
5.2G	● BW=1.4M: 5154 - 5246 MHz ● BW=10M: 5157 - 5243 MHz ● BW=20M: 5167 - 5233 MHz	■ USA
	● BW=10M: 5177 - 5243 MHz ● BW=20M: 5187 - 5233 MHz	■ EU ■ UK

Note

- Some countries and regions have strict restrictions on the use of radio communication frequency bands. It is crucial to use them legally, and any modification of communication modules is strictly prohibited.
- In Germany there's specific requirements for the 5.2GHz frequency band. Unmanned aerial systems are only allowed to use the frequency within the range of 5170MHz to 5250MHz.
- If flying in any countries not listed in the above table, please consult the local

communication management authorities to ensure that the aircraft communication frequency bands comply with local regulatory requirements.

■ Information Of Wi-Fi Frequency Bands for Aircraft

The EVO Max series support the Wi-Fi Super Download feature. After the aircraft lands, it will automatically activate Wi-Fi. Other mobile devices can quickly transfer and download photos and video files captured by the aircraft by connecting to the aircraft's Wi-Fi.

Note

- The aircraft is equipped with the hardware at the factory for the Wi-Fi Super Download feature. This feature will be available in future firmware updates. Please update accordingly when the feature is available.

The Wi-Fi frequency bands of the EVO Max series comply with regulatory requirements worldwide. The relevant certified frequency bands are listed in the table below.
In actual use, after power-on and paired the aircraft and the remote controller, the Autel Enterprise App in the remote controller will automatically determine the location based on the GNSS information received by the aircraft. It will then automatically select the Wi-Fi frequency band that complies with local regulations for the specific country or region.

Table 3-16 Global Certified Frequency Bands (Wi-Fi)

Operating Frequency	Details	Certified Countries & Regions
2.4G (2400 – 2483.5MHz)	802.11b/g/n/ax	■ Chinese Mainland ■ Taiwan, China ■ USA ■ Canada ■ EU ■ UK ■ Australia ■ Korea ■ Japan ■ Russia
5.8G (5725 – 5850MHz)	802.11a/n/ax	■ Chinese Mainland ■ Taiwan, China ■ USA ■ Canada ■ EU ■ UK ■ Australia ■ Korea
5.2G (5150 – 5250MHz)	802.11a/n/ax	■ USA ■ EU

		■ UK

■ Remote Control Devices

In addition to the remote controller, the aircraft also supports pairing with the EVO Nest for remote communication control over the aircraft.

Table 3-17 Remote Control Device Support List

Control Device Information	Autel Smart Controller V3	EVO Nest
Part Number (EAN)	6924991129011	6924991124474
Part Number (UPC)	889520209014	889520204477
Manufacturer	Autel Robotics	Autel Robotics
Control Software	Autel Enterprise App	Autel SkyCommand Center
Software Version Requirement	V1.0.0.0 or higher	V3.5.12.20 or higher
Supplementary Information	Standard configuration	Nest Kit

Tip

- Autel Smart Controller V3 is a standard accessory in the aircraft package, and we also provide retail package to choose separately.
- We offer multiple retail versions for Autel Smart Controller V3. Only the remote controller installed with the Autel Enterprise App supports the control of EVO Max series aircraft. Please consult Autel Robotics when making a purchase.
- Please note that the EVO Nest is an optional accessory and the user can purchase separately.
- When using the above devices to remotely control the aircraft, make sure that the control software version meets the above requirements.

Chapter 4 Remote Controller

4.1 Introduction

The Autel Smart Controller V3 is installed with the Autel Enterprise App by default, allowing you to operate and set the aircraft and the gimbal camera and transmit high-definition videos from the gimbal camera in real time. It offers a maximum communication distance of 15 kilometers.

Note

- The maximum communication distance of the Autel Smart Controller V3 is measured under unblocked and interference-free conditions and is for references only.
- It supports adaptive frequency hopping transmission, selects the optimal channel according to the electromagnetic interference situation, and has strong anti-interference ability.
- The whole link data storage between the aircraft and the remote controller adopts the AES-128 encryption method to ensure end-to-end data communication security.

4.1.1 Remote Controller Components

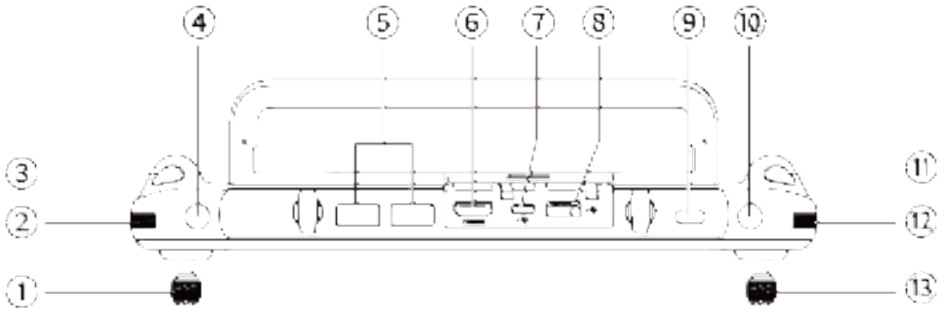

Fig 4-1 Remote Controller Top-Down View

Table 4-1 Remote Controller Top-Down View Details

No.	name	Description
1	Left Command Stick	Controls the state of motion of the aircraft. The default stick mode is Mode 2. In this mode, you can use the stick to control the ascent, descent, and heading of the aircraft. You can set the stick mode in the Autel Enterprise App. For more information, see "6.5.3 RC Settings" in Chapter 6.
2	Left Dial Wheel	Turn the dial wheel to adjust the gimbal pitch.
3	Video Recording	Press the button to start/end recording videos.

	Button	
4	Key C1	Use the Autel Enterprise App to customize the key function. For more information, see "6.5.3 RC Settings" in Chapter 6.
5	Air Outlet	For heat dissipation of the remote controller. When using it, please pay attention to whether there are foreign objects blocking the air outlet.
6	HDMI Interface	Outputs the live view of the remote controller to a supported display device.
7	USB-C Interface	Used for remote controller charging or device debugging.
8	USB-A Interface	Connects to an expandable 4G/5G module or external USB device for data transmission.
9	Power button	Long press for 3s to turn on/off the remote controller. When the remote controller is on, quickly press the power button to switch between Screen On and Screen Off.
10	Key C2	Use the Autel Enterprise App to customize the key function. For more information, see "6.5.3 RC Settings" in Chapter 6.
11	Shooting Button	Press the button to take a photo.
12	Right Dial Wheel	Turn the dial wheel to adjust the zoom factor of the camera.
13	Right Stick	Controls the state of motion of the aircraft. The default stick mode is Mode 2. In this mode, you can use the stick to control the translation of the aircraft in four directions: front/back/left/right. You can set the stick mode in the Autel Enterprise App. For more information, see "6.5.3 RC Settings" in Chapter 6.

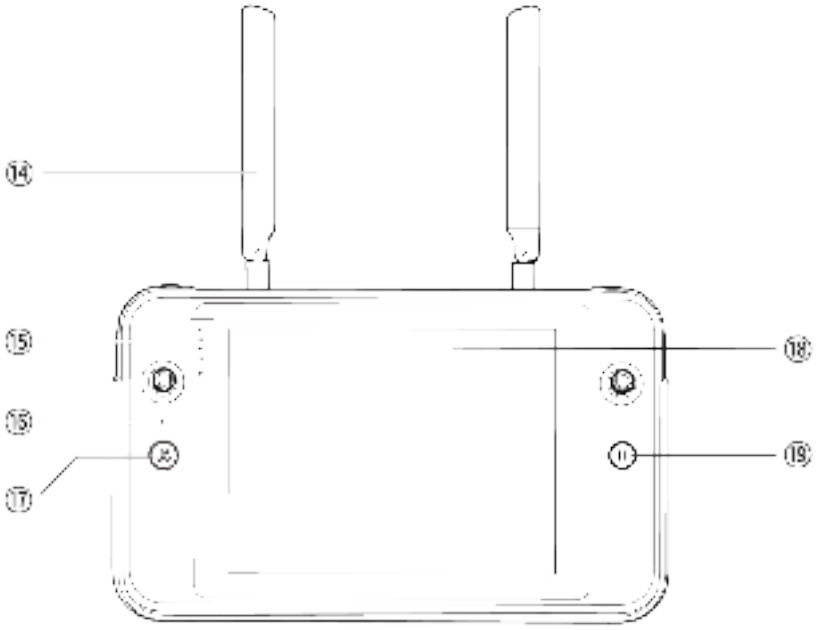

Fig 4-2 Remote Controller Front View

Table 4-2 Remote Controller Front View Details

No.	name	Description
14	Antenna	Transmits the control signals of the remote controller and receives the image transmission information of the aircraft.
15	Battery Level Indicator	Displays the remaining battery level of the remote controller.
16	Audio Input	Receives information from an external audio source near the remote controller.
17	Take-off/Return-to-Home Button	When the aircraft is turned on but not taking off, press and hold the button for 2 seconds, and the aircraft will take off and hover at an altitude of 1.2 meters above the ground. When the aircraft is flying, press and hold the button for 2 seconds, and the aircraft will automatically begin the return-to-home process.
18	Display	Displays real-time image transmission views. with 2048×1536 resolution. Touch operation is supported.
19	Pause Button	When the aircraft is in autonomous flight mode, short press this button to control the aircraft to suspend autonomous flight and hover in place or resume autonomous flight; press and hold this button for 2 seconds to exit the autonomous flight.

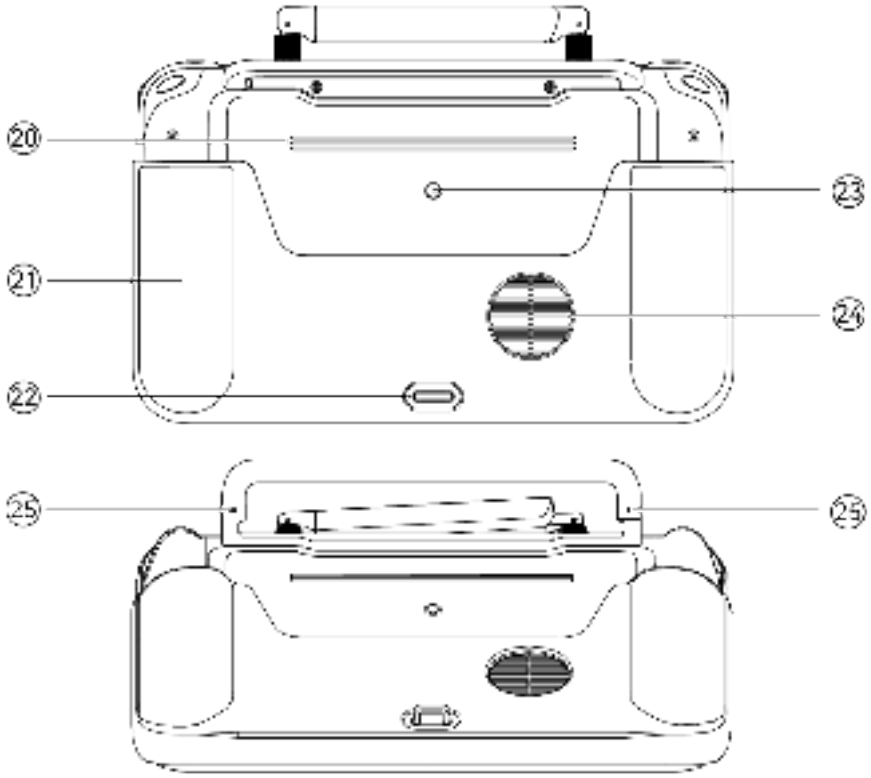

Fig 4-3 Remote Controller Rear View

Table 4-3 Remote Controller Rear View Details

No.	name	Description
20	Speaker	Plays sound to indicate the status of the aircraft.
21	Protective Cover	Optional accessory. Used to prevent external damage such as collision and abrasion of the remote controller.
22	Lower Hook	Used to connect and fix the remote controller strap.
23	Standard 1/4 interface	Used for attaching tripods.
24	Air Inlet	Used for heat dissipation of the remote controller. Please pay attention to whether there are foreign objects blocking the air inlet when using it.
25	Command Stick Storage Slot	Used to store left and right sticks.

4.1.2 Communication Frequency Bands

The image transmission frequency bands of Autel Smart Controller V3 comply with regulatory requirements worldwide. Please refer to the table below for the relevant certified frequency bands.

Tip

- After the aircraft is paired with the remote controller, the frequency bands between them will be automatically controlled by the Autel Enterprise App based on the geographical information of the aircraft. This is to ensure compliance with local regulations regarding frequency bands.
- Users can also manually select a legal video transmission frequency band. For detailed instructions, see "6.5.4 Image Transmission Settings" in Chapter 6.
- Before flight, please ensure that the aircraft receives a strong GNSS signal after powering on. This allows the Autel Enterprise App to receive the proper communication frequency band.
- When users adopt visual positioning mode (such as in scenarios without GNSS signals), the wireless communication frequency band between the aircraft and remote controller will default to the band used in the previous flight. In this case, it is advisable to power on the aircraft in an area with a strong GNSS signal, then start flight in the actual operational area.

Table 4-4 Global Certified Frequency Bands (Image Transmission)

Operating Frequency	Details	Certified Countries & Regions
2.4G	● BW=1.4M: 2403.5 - 2475.5 MHz ● BW=10M: 2407.5 - 2471.5 MHz ● BW=20M: 2412.5 - 2462.5 MHz	■ Chinese Mainland ■ Taiwan ■ USA ■ Canada ■ EU ■ UK ■ Australia ■ Korea ■ Japan
5.8G	● BW=1.4M: 5728 - 5847 MHz ● BW=10M: 5733 - 5842 MHz ● BW=20M: 5738 - 5839 MHz	■ Chinese Mainland ■ Taiwan ■ USA ■ Canada ■ EU ■ UK ■ Australia ■ Korea
5.7G	● BW=1.4M: 5652.5 - 5752.5 MHz ● BW=10M: 5655 - 5750 MHz ● BW=20M: 5660 - 5745 MHz	■ Japan
900M	● BW=1.4M: 904 - 926 MHz ● BW=10M: 909 - 921 MHz ● BW=20M: 914 - 916 MHz	■ USA ■ Canada

Table 4-5 Global Certified Frequency Bands (Wi-Fi)

Operating Frequency	Details	Certified Countries & Regions
2.4G (2400 – 2483.5 MHz)	802.11b/g/n	■ Chinese Mainland ■ Taiwan, China ■ USA ■ Canada ■ EU ■ UK ■ Australia ■ Korea ■ Japan
5.8G (5725 – 5850 MHz)	802.11a/n/ac	■ Chinese Mainland ■ Taiwan, China ■ USA ■ Canada ■ EU ■ UK ■ Australia ■ Korea
5.2G (5150 – 5250 MHz)	802.11a/n/ac	■ Japan

4.2 Installing the Remote Controller Lanyard

Tip

- The remote controller lanyard is an optional accessory. You can choose whether to install it as required.
- When holding the remote controller for a long time during flight operations, we recommend that you install the remote controller lanyard to effectively reduce the pressure on your hands.

■ Steps

1. Clip the two metal clips on the lanyard to the narrow positions on both sides of the metal handle at the back of the controller.
2. Open the metal button of the lanyard, bypass the lower hook at the bottom of the back of the controller, and then fasten the metal button.
3. Wear the lanyard around your neck, as shown in the figure below, and adjust it to a suitable length.

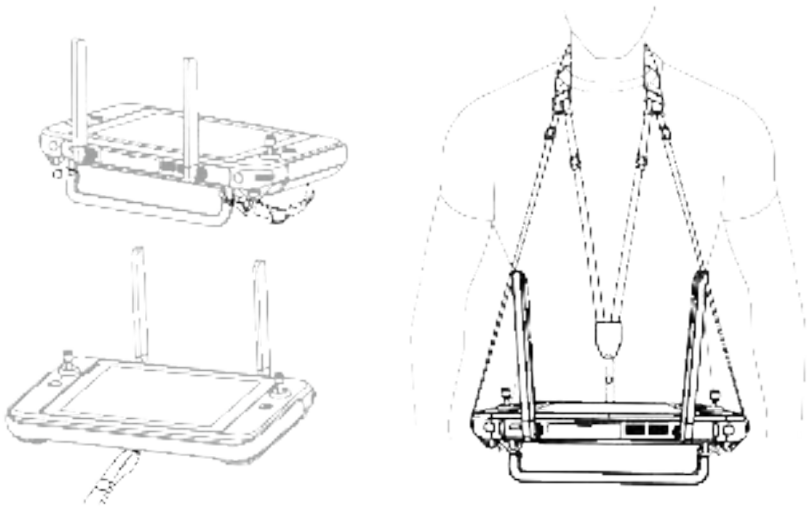

Fig 4-4 Install the Remote Controller Lanyard (As Required)

4.3 Installing/Storing Command Sticks

The Autel Smart Controller V3 features removable command sticks, which effectively reduce storage space and enable easy carrying and transportation.

■ Installing command sticks

There is a command stick storage slot above the mental handle at the back of the controller. Rotate counterclockwise to remove the two command sticks and then rotate them clockwise to install them separately on the remote controller.

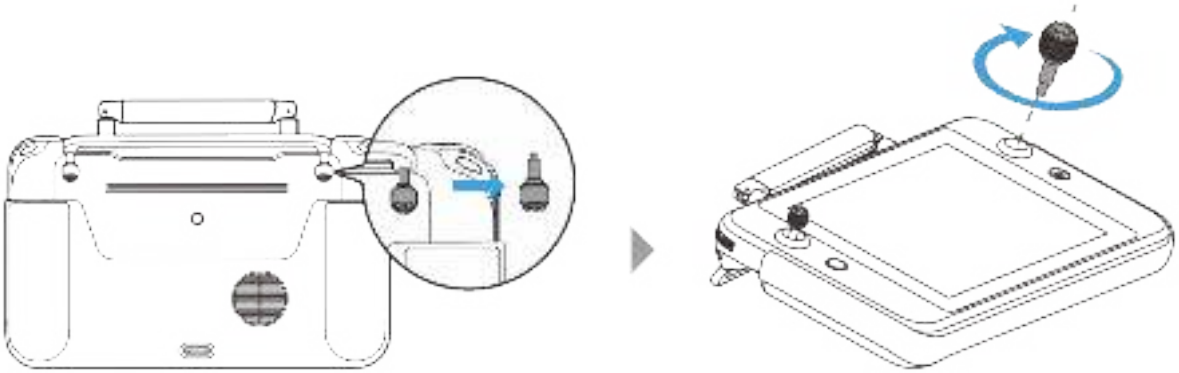

Fig 4-5 Installing command sticks

■ Storing Command sticks

Simply follow the reverse steps of the above operation.

Tip

- When the command sticks are not in use (such as during transportation and temporary aircraft standby), we recommend that you remove and store them on the metal handle. This can prevent you from accidentally touching the command sticks, causing damage to

the sticks or unintended startup of the aircraft.

4.4 Turning the Remote Controller On/Off

■ Turning the Remote Controller On

Press and hold the power button at the top of the remote controller for 3 seconds until the controller emits a "beep" sound to turn it on.

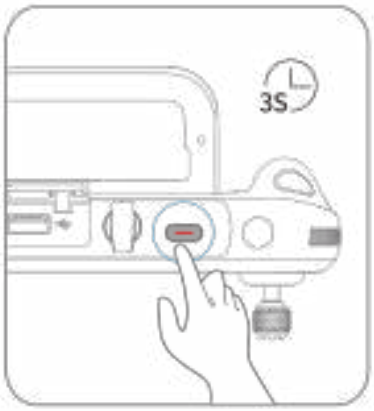

Fig 4-6 Turning the Remote Controller On

Tip

- When using a brand-new remote controller for the first time, please follow the on-screen instructions to complete the relevant setup.

■ Turning the Remote Controller Off

When the remote controller is on, press and hold the power button at the top of the remote controller until the "Off" or "Restart" icon appears at the top of the controller's screen. Tapping the "Off" icon will turn off the remote controller. Tapping the "Restart" icon will restart the remote controller.

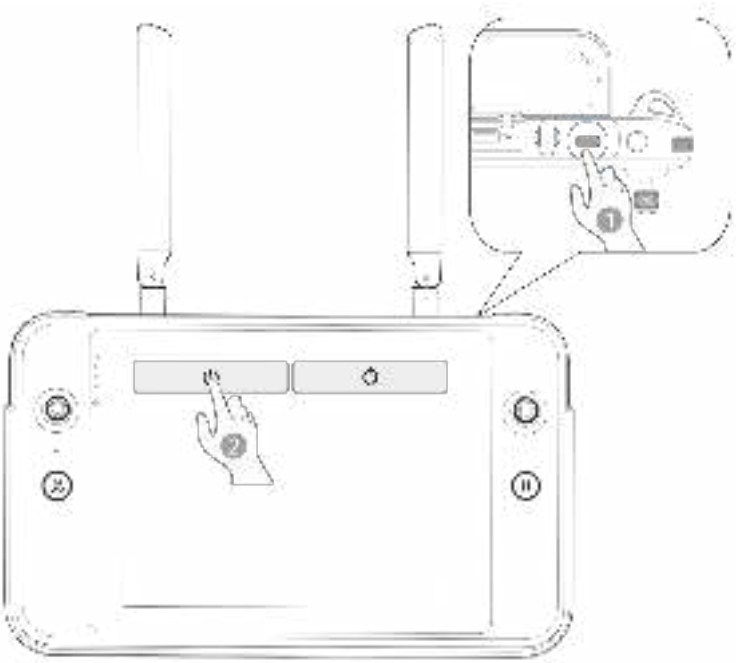

Fig 4-7 Turning the Remote Controller Off

Tip
● When the remote controller is on, you can press and hold the power button at the top of the remote controller for 6 seconds to forcibly turn it off.

4.5 Checking the Battery Level of the Remote Controller

When the remote controller is off, short press the power button of the remote controller for 1 second, and the battery level indicator will display the battery level of the remote controller.

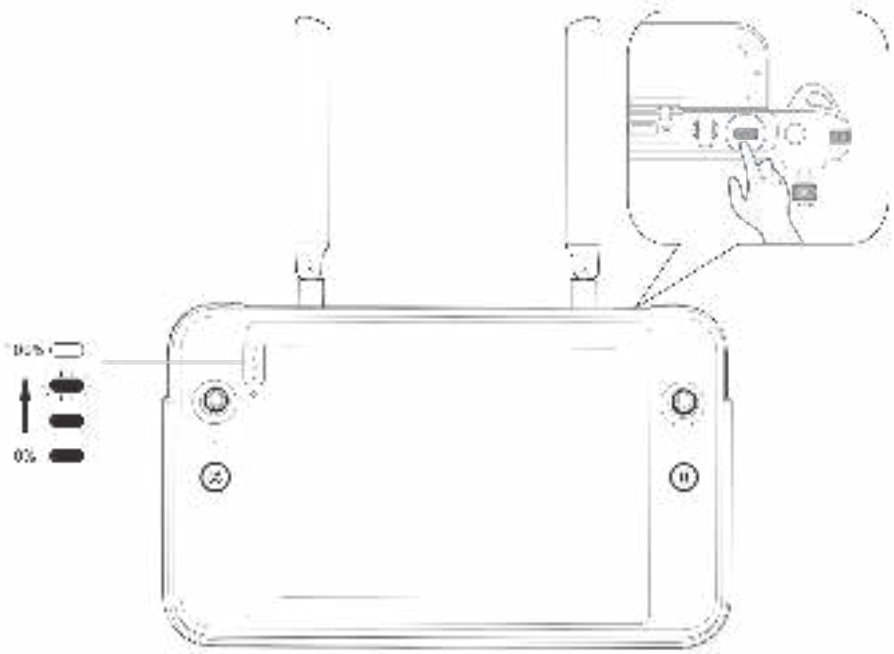

Fig 4-8 Checking the Battery Level of the Remote Controller

Table 4-6 Battery Remaining

Power Display	Definition	Power Display	Definition
	1 light always on: 0%-25% power		2 lights always on: 25%-50% power
	3 lights always on: 50%-75% power		4 lights always on: 75%-100% power

Tip

When the remote controller is on, you can check the current battery level of the remote controller in the following ways:

- Check it on the top status bar of the Autel Enterprise App.
- Check it on the system status notification bar of the remote controller. In this case, you need to enable “Battery Percentage” in the “Battery” of the system settings in advance.
- Go to the system settings of the remote controller and check the current battery level of the controller in “Battery”.

4.6 Charging the Remote Controller

Connect the output end of the official remote controller charger to the USB-C interface of the remote controller by using a USB-C to USB-A (USB-C to USB-C) data cable and connect the plug of the charger to an AC power supply (100-240 V~ 50/60 Hz).

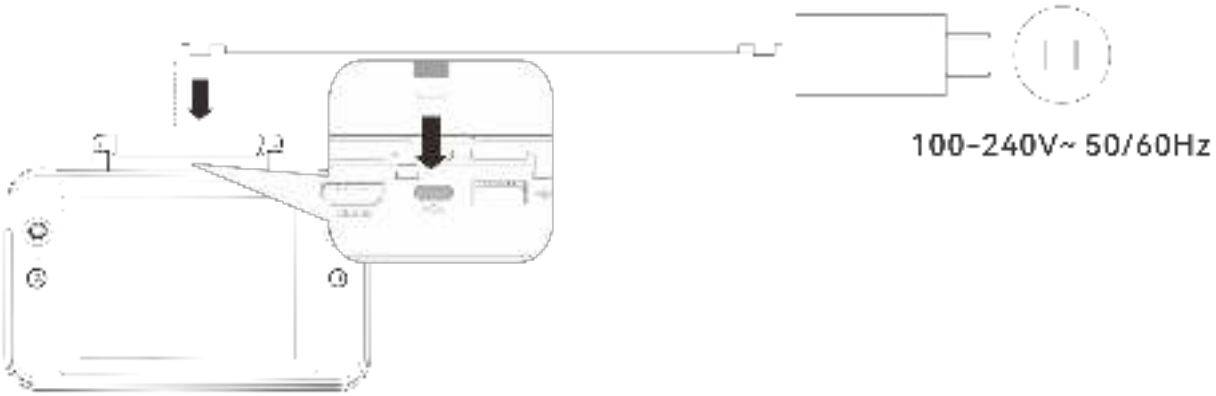

Fig 4-9 Use the remote controller charger to charge the remote controller

Warning

- Please use the official charger provided by Autel Robotics to charge the remote controller. Using third-party chargers may damage the battery of the remote controller.

- After charging is complete, please disconnect the remote controller from the charging device promptly.

Note

- It is recommended to fully charge the remote controller battery before the aircraft takes off.
- Generally, it takes about 120 minutes to fully charge the aircraft battery, but the charging time is related to the remaining battery level.

4.7 Adjusting the Antenna Position of the Remote Controller

During flight, please extend the antenna of the remote controller and adjust it to an appropriate position. The strength of the signal received by the antenna varies depending on its position.
When the angle between the antenna and the back of the remote controller is 180° or 270°, and the plane of the antenna faces the aircraft, the signal quality between the remote controller and the aircraft can reach its best state.

Important

- When you operate the aircraft, make sure that the aircraft is in the place for the best communications.
- Do not use other communication devices of the same frequency band at the same time to prevent interference with the signals of the remote controller.
- During flight, if there is a poor image transmission signal between the aircraft and the remote controller, the remote controller will provide a prompt. Please adjust the antenna orientation according to the prompt to ensure that the aircraft is in the optimal data transmission range.
- Please make sure that the antenna of the remote controller is securely fastened. If the antenna becomes loose, please rotate the antenna clockwise until it is firmly fastened.

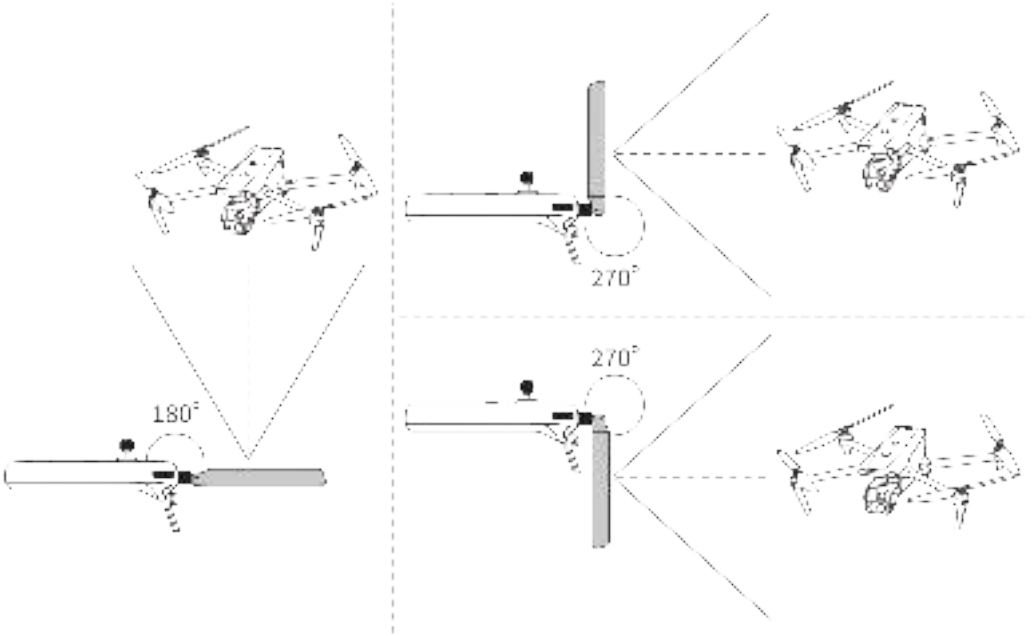

Fig 4-10 Extend the antenna

4.8 Remote Controller System Interfaces

4.8.1 Remote Controller Main Interface

After the remote controller is turned on, it enters the main interface of the Autel Enterprise App by default.
In the main interface of the Autel Enterprise App, slide down from the top of the touch screen or slide up from the bottom of the touch screen to display the system status notification bar and navigation keys, and tap the "Home" button or the "Back" button to enter the "Remote Controller Main Interface". Swipe left and right on the "Remote Controller Main Interface" to switch between different screens, and enter other applications as needed.

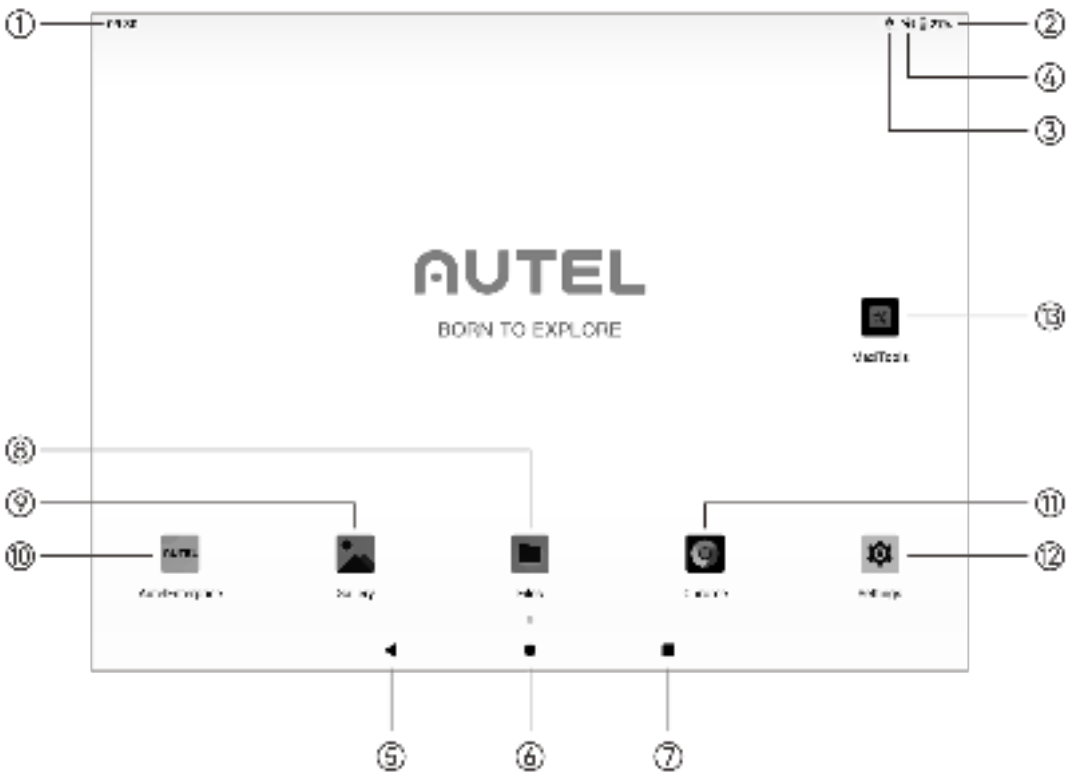

Fig 4-11 Remote Controller Main Interface

Table 4-7 Remote Controller Main Interface Details

No.	Name	Description
1	Time	Indicates the current system time.
2	Battery Status	Indicates the current battery status of the remote controller.
3	Wi-Fi Status	Indicates that Wi-Fi is currently connected. If not connected, the icon is not displayed. You can quickly turn on or off the connection to Wi-Fi by sliding down from anywhere on the "Remote Controller Interface" to enter the "Shortcut Menu".
4	Location Info	Indicates that location information is currently enabled. If not enabled, the icon is not displayed. You can tap "Settings" to enter the "Location Information" interface to quickly turn on or off location information.
5	Back Button	Tap the button to return to the previous page.
6	Home Button	Tap the button to jump to the "Remote Controller Main Interface".
7	“Recent apps” Button	Tap the button to view all background programs currently running and take screenshots. Press and hold the application to be closed and slide up to

		close the application. Select the interface where you want to take a screenshot, and tap the "Screenshot" button to print, transfer via Bluetooth, or edit the screenshot.
8	Files	The app is installed in the system by default. Tap it to manage the files saved in the current system.
9	Gallery	The app is installed in the system by default. Tap it to view the images saved by the current system.
10	Autel Enterprise	Flight software. The Autel Enterprise App starts by default when the remote controller is turned on. For more information, see “Chapter 6 Autel Enterprise App”.
11	Chrome	Google Chrome. The app is installed in the system by default. When the remote controller is connected to the Internet, you can use it to browse web pages and access Internet resources.
12	Settings	The system settings app of the remote controller. Tap it to enter the settings function, and you can set the network, Bluetooth, applications and notifications, battery, display, sound, storage, location information, security, language, gestures, date and time, device Name, etc.
13	Maxitools	The app is installed in the system by default. It supports the log function and can restore factory settings.

Tip

- The remote controller supports the installation of third-party Android apps, but you need to obtain the installation packages on your own.
- The remote controller has a screen aspect ratio of 4:3, and some third-party app interfaces may encounter compatibility issues.

Table 4-8 List of Pre-installed Apps on the Remote Controller

No.	Pre-installed App	Device Compatibility	Software Version	Operating System Version
1	Files	√	11	Android 11
2	Gallery	√	1.1.40030	Android 11
3	Autel Enterprise	√	1.2.18	Android 11
4	Chrome	√	68.0.3440.70	Android 11

5	Settings	√	11	Android 11
6	Maxitools	√	2.45	Android 11
7	Google Pinyin Input	√	4.5.2.193126728-arm64-v8a	Android 11
8	Android Keyboard (AOSP)	√	11	Android 11

Tip

- Please be aware that the factory version of the Autel Enterprise App may vary depending on subsequent function upgrades.

4.8.2 Shortcut Menu

Slide down from anywhere on the "Remote Controller Interface", or slide down from the top of the screen in any app to display the system status notification bar, and then slide down again to bring up the “Shortcut Menu”.
In the "Shortcut Menu", you can quickly set Wi-Fi, Bluetooth, screenshot, screen recording, airplane mode, screen brightness, and remote controller sound.

Fig 4-12 Shortcut Menu

Table 4-9 Shortcut Menu Details

No.	name	Description
1	Notification Center	Displays system or app notifications.

2	Time and Date	Displays the current system time, date, and week of the remote controller.
3	Wi-Fi	Tap the “” icon to enable or disable the Wi-Fi function. Long press it to enter WLAN settings and select the wireless network to be connected.
	Bluetooth	Tap the “” icon to enable or disable the Bluetooth function. Long press it to enter the Bluetooth settings and select the Bluetooth to be connected.
	Screenshot	Tap the “” icon to use the screenshot function, which will capture the current screen (hide the Shortcut Menu to take a screenshot).
	Screen Recor.. Start	After tapping on the “” icon, a dialog box will pop up, where you can choose whether to enable the functions of recording audio and displaying the touch screen position, and then tap the "Start" button, wait for 3 seconds, and start screen recording. Tap the icon again or tap “Screen Recorder” to turn off screen recording.
	Airplane mode	Tap the “” icon to turn on or off the airplane mode, that is, to turn on or turn off the Wi-Fi and Bluetooth functions at the same time.
4	Screen Brightness Adjustment	Drag the slider to adjust the screen brightness.
5	Volume Adjustment	Drag the slider to adjust the media volume.

4.9 Frequency Pairing With the Remote Controller

4.9.1 Using the Autel Enterprise App

Only after the remote controller and the aircraft are paired can you operate the aircraft using the remote controller.

Table 4-10 Frequency Pairing Process in the Autel Enterprise App

Step	Operation	Diagram
1	Turn on the remote controller and the aircraft. After entering the main interface of the Autel Enterprise App, tap “” in the upper-right corner, tap "", select “”, and then tap "Connect to aircraft".	
2	After a dialog box pops up, double-click on the smart battery power button on the aircraft to complete the frequency pairing process with the remote controller.	

Note

- The aircraft included in the aircraft kit is paired with the remote controller provided in the kit at the factory. No pairing is required after the aircraft is powered on. Normally, after completing the aircraft activation process, you can directly use the remote controller to operate the aircraft.
- If the aircraft and the remote controller become unpaired due to other reasons, please follow the above steps to pair the aircraft with the remote controller again.

Important

- When pairing, please keep the remote controller and the aircraft close together, at most 50 cm apart.

4.9.2 Using Combination Keys (For Forced Frequency Pairing)

If the remote controller is turned off, you can perform forced frequency pairing. The process is as follows:

1. Press and hold the power button and the take-off/return-to-home button of the remote controller at the same time until the battery level indicators of the remote controller blink quickly, which indicates that the remote controller has entered the forced frequency pairing state.
2. Make sure that the aircraft is turned on. Double-click on the power button of the aircraft, and the front and rear arm lights of the aircraft will turn green and blink quickly.
3. When the front and rear arm lights of the aircraft and the battery level indicator of the remote controller stop blinking, it indicates that the frequency pairing is successfully done.

4.10 Selecting Stick Mode

4.10.1 Stick Modes

When using the remote controller to operate the aircraft, you need to know the current stick mode of the remote controller and fly with caution.
Three stick modes are available, that is, Mode 1, Mode 2 (default), and Mode 3.

■ **Mode 1**

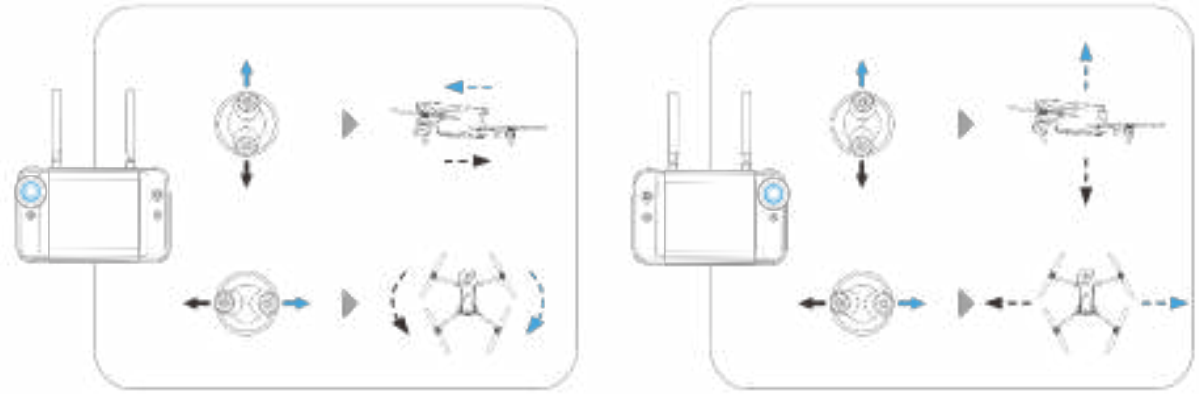

Fig 4-13 Mode 1

Table 4-11 Mode 1 Details

Stick	Move Up/Down	Move Left/Right
Left Command Stick	Controls the forward and backward movement of the aircraft	Controls the heading of the aircraft
Right Stick	Controls the ascent and descent of the aircraft	Controls the left or right movement of the aircraft

■ Mode 2

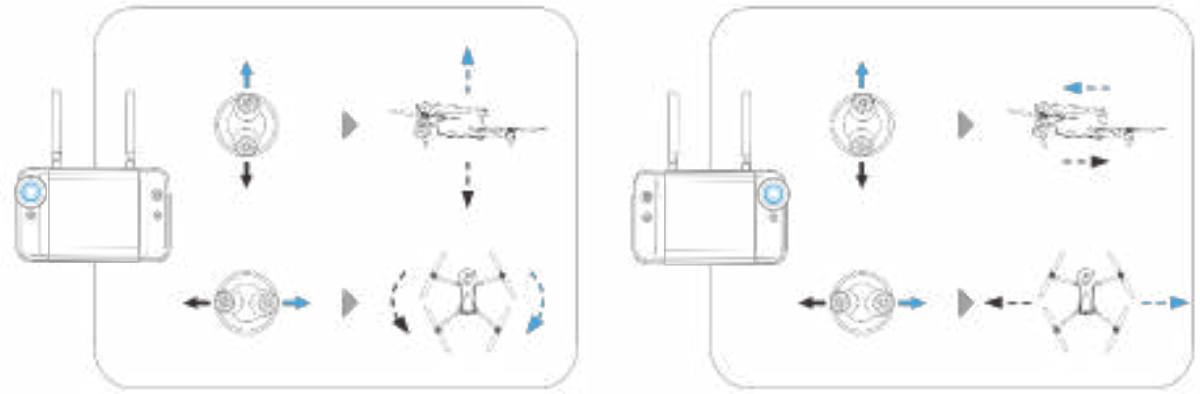

Fig 4-14 Mode 2

Table 4-12 Mode 2 Details

Stick	Move Up/Down	Move Left/Right
Left Command Stick	Controls the ascent and descent of the aircraft	Controls the heading of the aircraft
Right Stick	Controls the forward and backward movement of the aircraft	Controls the left or right movement of the aircraft

■ Mode 3

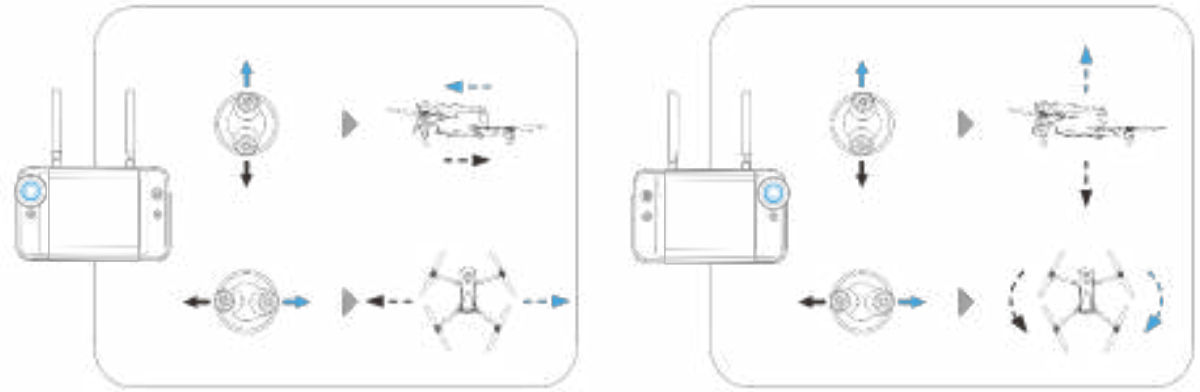

Fig 4-15 Mode 3

Table 4-13 Mode 3 Details

Stick	Move Up/Down	Move Left/Right
Left Command Stick	Controls the forward and backward movement of the aircraft	Controls the left or right movement of the aircraft
Right Stick	Controls the ascent and descent of the aircraft	Controls the heading of the aircraft

⚠ Warning

- Do not hand over the remote controller to persons who have not learned how to use the remote controller.
- If you are operating the aircraft for the first time, please keep the force gentle when moving the command sticks until you are familiar with the operation.
- The flight speed of the aircraft is proportional to the degree of the command stick movement. When there are people or obstacles near the aircraft, please do not move the stick excessively.

4.10.2 Setting Stick Mode

You can set the stick mode according to your preference. For detailed setting instructions, see "6.5.3 RC Settings" in Chapter 6. The default stick mode of the remote controller is "Mode 2".

Table 4-14 Default Control Mode (Mode 2)

Mode 2	Aircraft Flight Status	Control Method
Left Command Stick Move Up or Down		1. The up-and-down direction of the left stick is the throttle stick, which is used to control the vertical lift of the aircraft. 2. Push the stick up, and the aircraft will rise vertically; pull the stick down, and the aircraft will descend vertically. 3. When the stick is returned to the center, the altitude of the aircraft remains unchanged. 4. When the aircraft takes off, please push the stick up to above the center, and the aircraft can lift off the ground.
Left Command Stick Move Left or Right		1. The left-and-right direction of the left stick is the yaw stick, which is used to control the heading of the aircraft. 2. Push the stick to the left, and the aircraft will rotate counterclockwise; push the stick to the right, and the aircraft will rotate clockwise. 3. When the stick is returned to the center, the rotational angular velocity of the aircraft is zero, and the aircraft does not rotate at this time. 4. The larger the degree of the stick movement, the greater the rotational angular velocity of the aircraft.
Right Stick Move Up or		1. The up-and-down direction of the right stick is the pitch stick, which is used to

Down		control the flight of the aircraft in the forward and backward directions. 2. Push the stick up, and the aircraft will tilt forward and fly towards the front of the nose; pull the stick down, and the aircraft will tilt backward and fly towards the tail of the aircraft. 3. When the stick is returned to the center, the aircraft remains horizontal in the forward and backward directions. 4. The larger the degree of the stick movement, the faster the flight speed of the aircraft, and the larger the tilt angle of the aircraft.
Right Stick Move Left or Right		1. The left-and-right direction of the right stick is the roll stick, which is used to control the flight of the aircraft in the left and right directions. 2. Push the stick to the left, and the aircraft will tilt to the left and fly to the left of the nose; pull the stick to the right, and the aircraft will tilt to the right and fly to the right of the nose. 3. When the stick is returned to the center, the aircraft remains horizontal in the left and -right directions. 4. The larger the degree of the stick movement, the faster the flight speed of the aircraft, and the larger the tilt angle of the aircraft.

Note

- When controlling the aircraft for landing, pull the throttle stick down to its lowest position. In this case, the aircraft will descend to an altitude of 1.2 meter above the ground, and then it will perform an assisted landing and automatically descend slowly.

4.10.3 Starting/Stopping the Aircraft Motor

Table 4-15 Start/Stop the Aircraft Motor

Process	Stick Operation	Description
Start the aircraft motor when the aircraft is		Power on the aircraft, and the aircraft will automatically perform a self-check (for

powered on		about 30 seconds). Then simultaneously move the left and right sticks inward or outward for 2 seconds, as shown in the figure, to start the aircraft motor.
Stop the aircraft motor when the aircraft is landing		When the aircraft is in landing state, pull the throttle stick down to its lowest position, as shown in the figure, and wait for the aircraft to land until the motor stops.
		When the aircraft is in landing state, simultaneously move the left and right sticks inward or outward, as shown in the figure, until the motor stops.

⚠ Warning

- When taking off and landing the aircraft, stay away from people, vehicles, and other moving objects.
- The aircraft will initiate a forced landing in case of sensor anomalies or critically low battery levels.

4.11 Remote Controller Keys

4.11.1 Custom Keys C1 and C2

You can customize the functions of the C1 and C2 custom keys according to your preferences. For detailed setting instructions, see "6.5.3 RC Settings" in Chapter 6.

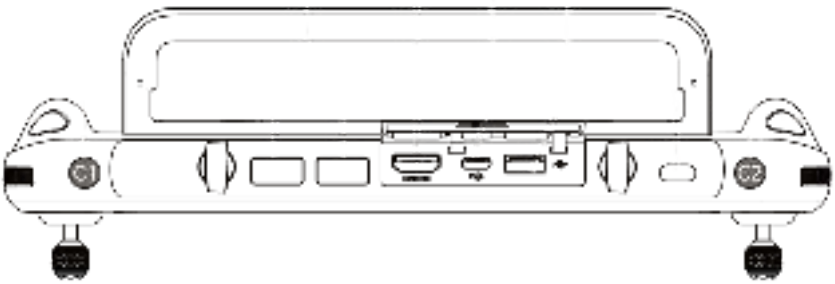

Fig 4-16 Custom Keys C1 and C2

Table 4-16 C1 and C2 Customizable Settings

No.	Function	Description
1	Visual Obstacle	Press to trigger: turn on/off the visual sensing system.

	Avoidance On/Off	When this function is enabled, the aircraft will automatically hover when it detects obstacles in the field of view.
2	Gimbal Pitch Recenter/45°/Down	Press to trigger: switch the gimbal angle. ➢ Gimbal Pitch Recenter: The heading angle of the gimbal returns from the current position to be consistent with the heading of the aircraft nose, and the gimbal pitch angle returns to a 0° direction from the current angle; ➢ Gimbal Pitch 45°: The heading angle of the gimbal returns from the current position to be consistent with the heading of the aircraft nose, and the gimbal pitch angle returns to a 45° direction from the current angle; ➢ Gimbal Pitch Down: The heading angle of the gimbal returns from the current position to be consistent with the heading of the aircraft nose, and the gimbal pitch angle rotates to a 90° direction from the current angle.
3	Map/Image Transmission	Press to trigger: switch the map/image transmission view.
4	Speed Mode	Press to trigger: switch the flight mode of the aircraft. For more information, see "3.9.2 Flight Modes" in Chapter 3.

⚠ Warning

- When the speed mode of the aircraft is switched to "Ludicrous", the visual obstacle avoidance system will be turned off.

4.11.2 Take-off/Return-to-Home Button and Pause Button

⚠ Warning

- The auto-return function will only be enabled when the GNSS signal is good.
- If the obstacle avoidance system is disabled during a return flight, the aircraft will not be able to automatically avoid obstacles.
- Before using the auto-return function, you need to set the home point in advance in the Autel Enterprise App. For more information, see "6.5.1 Flight Control Parameter Setting" in Chapter 6. If the home point is not set, the aircraft will take the take-off point as the home point by default.

To manually activate the auto-return function, press and hold the take-off/return-to-home button "" on the remote controller for 2 seconds until the remote controller emits a "beep"

sound. Upon receiving the command, the aircraft will automatically return and land at the preset home point.

When the aircraft is in the auto-return state, the remote controller will be disabled. You can short press the pause button "⏸" until the remote controller emits a "beep" sound to pause the auto-return, or long press the pause button "⏸" for 2 seconds until the remote controller emits a "beep" sound to exit the auto-return. After pausing or exiting the auto-return, you can reactivate the remote controller for controlling the aircraft.

Fig 4-17 Take-off/Return-to-Home Button and Pause Button

Tip

- When the aircraft pauses an auto-return, it will hover in place. To resume the auto-return, press the pause button "⏸" again until the remote controller emits a "beep" sound.

Warning

- If the auto-return home point is not suitable for the aircraft to land (such as uneven ground and crowds), please exit the auto-return before the aircraft reaches the home point, and then manually resume control to land.

4.12 Turning On/Off the Remote Controller Prompt Sound

In some scenarios, the remote controller will send a prompt sound, such as the screen lock sound and power-on sound.

Tip

- You can access the system settings app from the main interface of the remote controller, and then drag the volume slider in “Sound” to adjust the media volume and notification

volume separately.

4.13 Calibrating the Remote Controller

If the remote controller is abnormal, it is recommended to calibrate it, as shown below.

Table 4-17 Calibrating the Remote Controller

Step	Operation	Diagram
1	Turn on the remote controller. After entering the main interface of the Autel Enterprise App, tap "⊞" in the upper-right corner, tap "⚙", select "▣", and then tap "RC Calibration". Follow the on-screen instructions to calibrate the remote controller.	
2	Calibration of the dials and command sticks: According to the calibration guide page of the remote controller, move the left and right dial wheels and the left and right sticks according to the directions shown in the figure and hold for 1 second. At this time, a beep will be heard, and the calibration direction icon will be changed from gray to dark blue, indicating that the orientation calibration was successful. There is no order in which directions are calibrated, until all directions are calibrated, the remote controller calibration is done.	

4.14 HDMI Screen Output

The remote controller is equipped with an HDMI interface. The interface allows you to output the real-time screen of the remote controller to supported digital devices such as display screens.

Chapter 5 Smart Battery

5.1 Battery Introduction

The EVO Max series aircraft comes standard with the MDX_8070_1488 smart battery (hereafter referred to as smart battery) as the power battery. This battery is a rechargeable lithium-ion polymer (LiPo) battery and features high energy density and capacity. The smart battery can be charged with an MDX120W battery charger.

Note

- The battery charger is included as part of the aircraft kit. You do not need to purchase it separately.

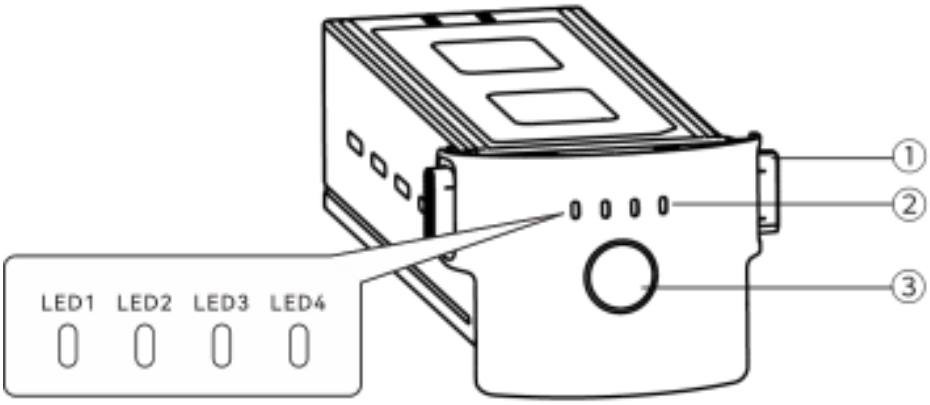

Fig 5-1 Battery Appearance

Table 5-1 Battery Appearance Details

No.	name	Description
1	Unlock Button	To remove the battery from the aircraft, press and hold the unlock buttons on both sides and pull out the battery.
2	Battery Level Indicator	Used to display the current battery level of the smart battery in normal situations.
3	Power Button	Long press the power button for 3s to turn on or turn off the battery.

5.2 Smart Battery Functions

The smart battery has the following functions:

■ Battery Level Display

The smart battery has a built-in battery level indicator, which shows the current battery level of the smart battery.

■ Self-heating

This function allows the smart battery to operate normally even in low-temperature environments, ensuring flight safety. For more information, see "5.2.4 Smart Battery Self-heating" in this chapter.

■ Communication

The aircraft can obtain real-time battery information, such as voltage, current, battery level, and battery temperature, through the communication interface on the smart battery.

■ Power Saving Mode

The smart battery will automatically shut down after 30 minutes of inactivity to reduce power consumption.

■ Dust and Water Resistance

When correctly installed in the aircraft, the battery has an IP43 protection rating.

■ Ultra-low Power Mode

When the smart battery is idle for 12 hours and the battery level is less than 8%, the battery BMS will enter the ultra-low power mode to reduce self-consumption. When entering ultra-low power mode, it needs to be activated by a charger before it can continue to use normally.

■ Self-discharge Protection

If the smart battery is stored in a high-temperature environment or not used for 6 days with a high battery level, the self-discharge protection will be activated. The smart battery will automatically discharge to a battery level of about 60% (by default) and the discharge process takes 2-3 days.

Tip

- Although the battery has no indication of a self-discharge cycle, you may notice that the battery is slightly warm, which is normal.

■ Sleep Mode Protection

If the smart battery has a low battery level, it will automatically enter sleep mode to prevent over-discharge. In this mode, the smart battery does not respond when the power button is pressed. To wake up the battery, you can connect it to a battery charger.

■ Charge Temperature Protection

The smart battery will stop charging when its temperature is lower than 5°C or higher than 45°C during charging, as charging the battery under such temperatures will damage the battery.

■ Overcurrent Protection

The smart battery will stop charging when the charging current is too high, as charging the battery with a high current can severely damage the battery.

■ Overcharge Protection

Charging will stop automatically when the smart battery is fully charged, as overcharging can severely damage the battery.

■ Balance Protection

The voltage of each battery cell in the smart battery is automatically kept balanced to protect the battery and maximize the performance of the battery.

■ Short Circuit Protection

Once a short circuit is detected, the power supply of the smart battery will be cut off to protect the battery.

⚠ Warning

- Before using the smart battery, please carefully read and strictly follow the requirements in this Manual, “Battery Safety Operation Guidelines”, and “Disclaimer”, and those on the battery's surface sticker. The user shall undertake all consequences if he/she fails to follow the usage requirements.

5.3 Smart Battery Usage

- Please use a smart battery within the appropriate temperature range (refer to the operating temperature of the aircraft). Using it in too high or low temperatures will affect the battery’s safety and lifespan and may cause spontaneous battery combustion or permanent damage to the battery.
- Do not use the aircraft in a strong electrostatic (such as thunderstorms) or electromagnetic environment. Otherwise, some functions of the smart battery may fail (e.g., abnormal battery output and power failure), resulting in serious aircraft malfunctions.
- Do not use a smart battery that has ever been dropped from the aircraft or subjected to external impacts.
- Do not use a water-soaked smart battery or immerse a smart battery in water or other liquids. Water contact inside the battery may cause corrosion, resulting in spontaneous battery combustion and even an explosion.
- Do not use a smart battery that emits smoke, is bulged, leaks liquids, or has a damaged appearance.
- The liquid inside the smart battery is corrosive. If it leaks, please keep away from it. If it accidentally contacts your skin or eyes, rinse immediately with clean water for at least 15 minutes and seek medical attention.
- Do not disassemble, puncture, strike, crush, or burn a smart battery in any way. Otherwise, it may lead to battery combustion or even explosion.
- Do not short-circuit the positive and negative terminals of a smart battery.
- If the battery connector of a smart battery is dirty, use a dry cloth to clean it. Otherwise, it may cause poor contact, leading to energy loss or charging failure.
- Before replacing the smart battery of the aircraft, make sure that the battery connector, battery compartment interface, battery surface, and battery compartment surface are dry and free of water, and then insert the battery into the aircraft.

5.3.1 Installing/Removing the Smart Battery

Table 5-2 Install the Smart Battery

Step	Operation	Diagram
1	Turn off the smart battery before installing the battery.	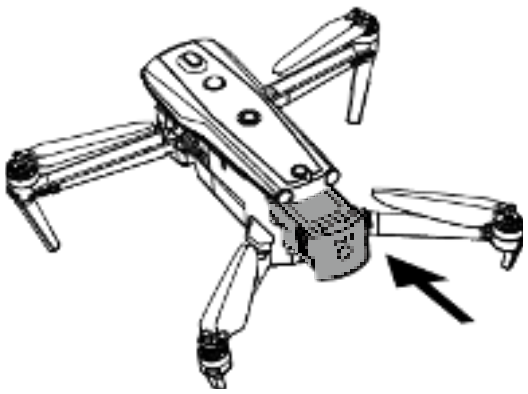
2	Slowly insert the smart battery into the battery compartment on the aircraft fuselage, and you will hear a clicking sound when the battery is in place.	

Warning

- If the smart battery is not installed properly, it may cause the battery to fall off during the flight, damage the aircraft, or even cause personal injury.
- Before installing the smart battery on the aircraft, make sure that the battery is turned off.

Table 5-3 Remove the Smart Battery

Step	Operation	Diagram
1	Turn off the smart battery before removing the battery.	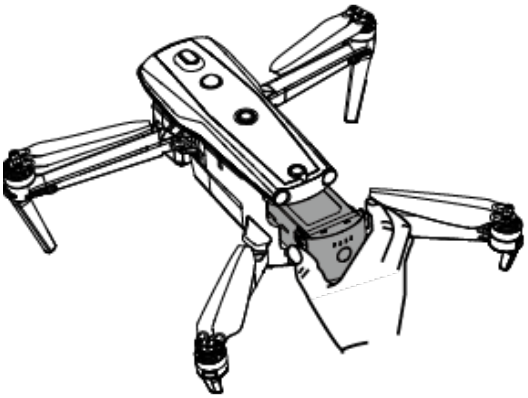
2	Press and hold the unlock buttons on both sides of the smart battery and slowly pull out the battery.	

Important

- The unlock buttons of the smart battery are wearable parts. Please do not press them hard to avoid any possible damage to the internal structure of the battery.

5.3.2 Turning On/Off the Smart Battery

■ Turning On the Smart Battery

When the smart battery is turned off, press and hold the power button for 3 seconds to turn on the battery.

■ Turning Off the Smart Battery

When the smart battery is turned on, press and hold the power button for 3 seconds to turn off the battery.

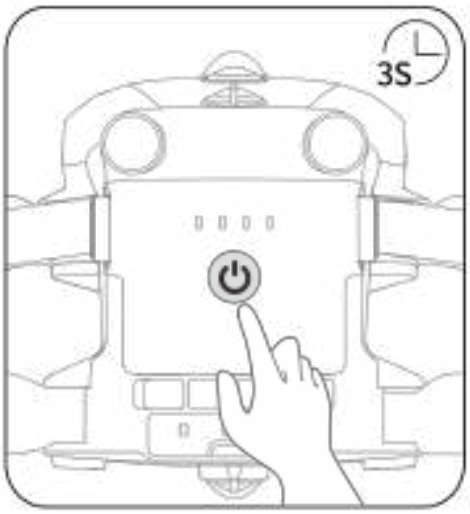

Fig 5-2 Turn On or Off the Smart Battery

Important

- If the smart battery is not installed in the aircraft, it is not recommended to turn on/off the battery, and attention should be paid to insulation protection at the battery connector.
- Before removing the smart battery from the aircraft, turn off the battery. The LED1 and LED4 battery level indicators on the smart battery will blink 5 times to indicate that the aircraft is shutting down. Remove the smart battery from the aircraft after all battery level indicators are off.

5.3.3 Checking Battery Level

When the smart battery is off, short press the battery power button for 1 second to check the current battery level through the battery level indicator status.

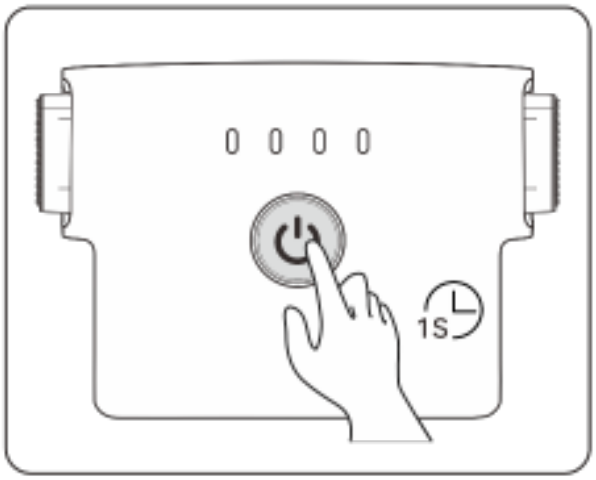

Fig 5-3 Checking Battery Level

Table 5-4 Battery Level Indicator Status (While Not Charging)

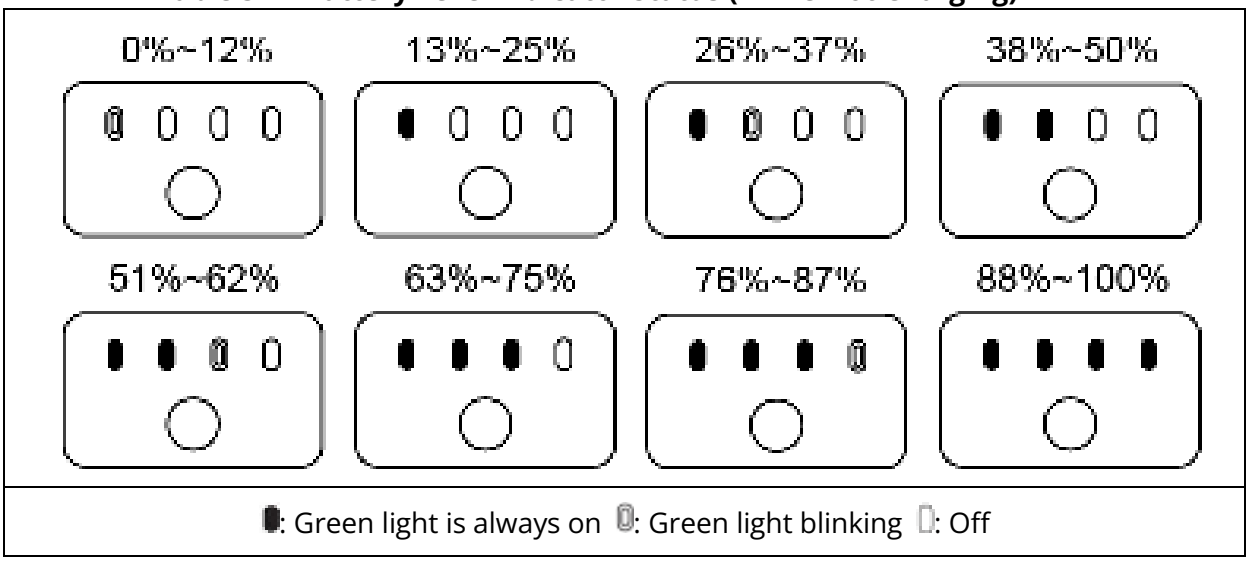

Tip

- After the aircraft is connected to the remote controller, you can check the current smart battery level of the aircraft in the top status notification bar or on the "Battery Information" page of the Autel Enterprise App. For more information, see “6.3 Status Notification Bar” and “6.5.5 Aircraft Battery” in Chapter 6.

5.3.4 Smart Battery Self-heating

The smart battery has a self-heating function, which can increase the battery temperature in low-temperature environments, helping maintain good output performance.

- When the smart battery is installed in the aircraft and the battery power is turned on, if the battery temperature is lower than 15°C, the battery self-heating function will be activated. After the aircraft takes off, the battery self-heating function will be automatically turned off.

- If the smart battery is not installed in the aircraft, short press the power button for 1 second and then long press the power button for 3 seconds to activate the battery self-heating function to keep the battery temperature between 15°C and 20°C for 10 minutes. At this point, if you want to exit the battery self-heating function, short press the power button for 1 second, and then long press the power button for 3 seconds.
- When the smart battery is connected to the battery charger and the battery power is turned on, if the battery temperature is lower than 5°C, the charger will supply power to the smart battery for self-heating. Once the battery temperature reaches 15°C, the self-heating function will be turned off.

Important

- When the self-heating function of the smart battery is manually activated, the battery should have at least around 10% of remaining power for self-heating.

When the smart battery is in the states of self-heating and heat preservation, the statuses of the battery level indicators are shown in the following table.

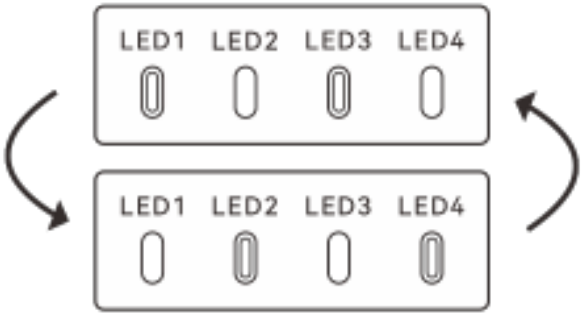

Fig 5-4 Self-heating State

Fig 5-5 Heat Preservation State

Table 5-5 Battery Level Indicator Status

No.	Description
1	LED1, LED3 and LED2, LED4 blink alternately in groups, indicating that it is heating.
2	The 4 LEDs blink at the same time, indicating that it has entered the heat preservation state.
	: Green light blinking : Off

Warning

- When the temperature of the smart battery is lower than -10°C or higher than 70°C, the

aircraft will not be allowed to take off. It is recommended to wait until the self-heating is over or the battery naturally cools down to an appropriate temperature before operating.

- When the temperature of the smart battery is lower than 5°C, the internal resistance of the battery will increase and the voltage will drop suddenly due to the low temperature, which will reduce the usable capacity of the battery and reduce the operating time of the aircraft. In low-temperature environments, make sure that the battery is fully charged before taking off.
- If the battery level of the smart battery is lower than 50%, it is not recommended to take off. When the battery level is low, it is difficult to activate the battery, which will reduce flight safety.
- During the flight, when the Autel Enterprise App prompts a low battery alarm, it is recommended to immediately return to the home point or land.
- In some low-temperature environments, even if the self-heating function is activated, the battery temperature may still not reach the usable temperature. In such cases, please add insulation measures during the heating process.
- In order to get the best performance from the smart battery, it is recommended to keep the battery temperature between 15°C to 35°C before flying.
- In a low-temperature environment, the self-heating time of the battery may be longer. It is recommended that you keep the battery warm in advance to shorten the self-heating time.

5.3.5 Charging the Smart Battery

Connect the charging interface of the official battery charger to the notch of the metal electrode of the smart battery, and connect the plug to the AC power supply (100-240 V~ 50/60 Hz).

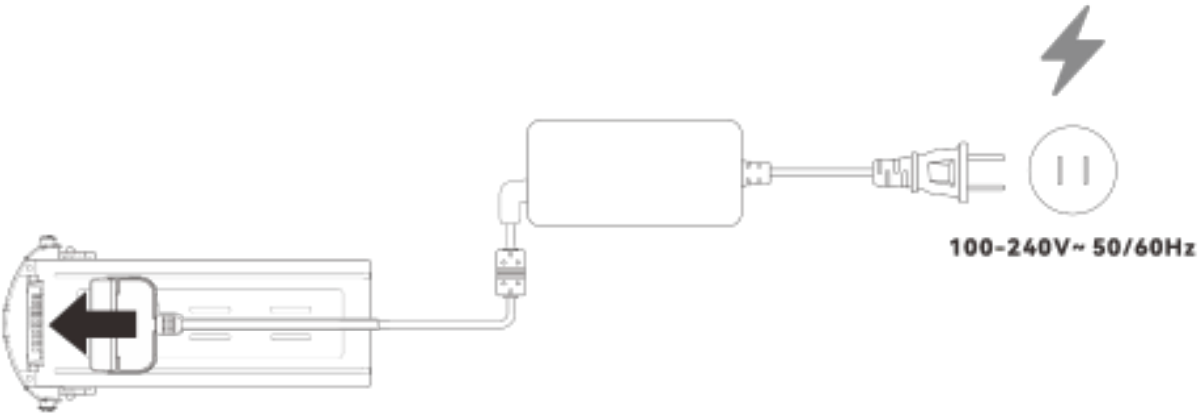

Fig 5-6 Use the Battery Charger to Charge the Smart Battery

Table 5-6 Battery Level Indicator Status (While Charging)

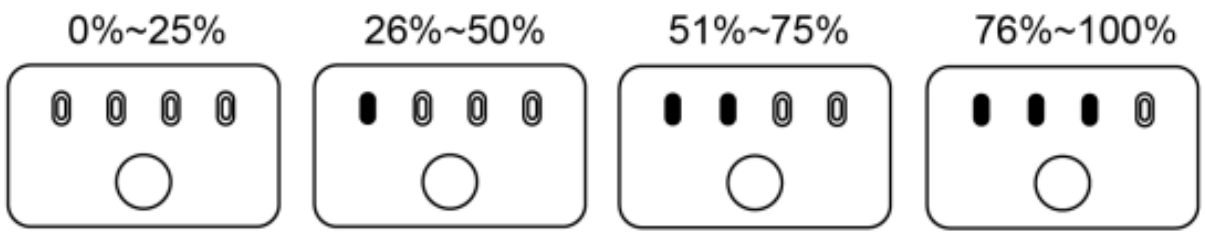

: Green light is always on : Green light blinking

Warning

- Do not charge a battery that emits smoke, is bulged, leaks liquids, or has a damaged appearance.
- Do not use damaged charging devices to charge the smart battery.
- Modifying the official smart battery or charging device provided by Autel Robotics is prohibited.
- Only use the battery and charging device provided by Autel Robotics. Autel Robotics is not responsible for any consequences, such as battery accidents and flight failure, caused by the use of third-party batteries or charging devices.
- Keep the smart battery away from flammable and explosive items during charging.
- After the smart battery is fully charged, disconnect the connection between the charger and the smart battery and power supply promptly.
- After flight, it is recommended to wait until the smart battery naturally cools down to an appropriate temperature before charging the battery. If the temperature of the smart battery is higher than 45°C, when the battery is connected to the charging device, the battery temperature protection function will be activated, and the battery cannot be charged until its temperature drops below 40°C.

Note

- It is recommended to fully charge the smart battery of the aircraft before the aircraft takes off.
- Generally, it takes about 90 minutes to fully charge the smart battery of the aircraft, but the charging time is related to the remaining battery level.

Table 5-7 Other Battery Indicator Warning Instructions

LED1	LED2	LED3	LED4	Warning Description
				The temperature is too high for charging.
				The charging current is too high, which causes a short circuit.
				A circuit overcurrent, a circuit

				overload, or a short circuit occurs during battery discharge.

: Indicator light blinking : Off

5.4 Storing and Transporting the Smart Battery

When storing the smart battery, keep the battery away from water or heat sources and store it in a dry, well-ventilated environment at room temperature.
Ideal storage conditions: The battery level is at around 60%, the ambient temperature is between 22°C to 28°C, and the ambient humidity is 65%±20% RH.
The energy of the MDX_8070_1488 smart battery is 120 Wh (capacity is 8070 mAh). Please refer to local lithium battery transportation policies for battery shipping or carrying.

Warning

- Before storing or transporting the smart battery, please turn off the battery.
- Store the smart battery out of the reach of children and pets.
- Store the smart battery away from direct sunlight, water, or reactive chemicals.
- Do not expose the smart battery to open flame, explosives, or other hazards.
- Do not store the smart battery in extreme temperatures. Otherwise, the lifespan of the battery may be shortened and the battery may even become damaged or ineffective. If the battery is not used for more than 1 day, it should be stored below 30°C (at room temperature).
- Do not place the smart battery in a microwave or pressure cooker.
- Do not place the smart battery directly on conductive surfaces (such as metal shells or panels).
- Do not place heavy objects on the smart battery. When subject to an external force, the battery may be damaged or even catch fire or explode.
- Do not store or transport the smart battery with sharp objects, watches, metal necklaces, earrings, or other metal items.
- Do not transport batteries that have a damaged appearance or a battery level of more than 30%.
- If the smart battery is left idle for a long time, please charge it every three months to avoid a shortened battery lifespan resulting from long-term low battery levels.

5.5 Maintaining and Handling the Smart Battery

5.5.1 Maintaining the Smart Battery

In order to maintain the activity of the smart battery of the aircraft, it is recommended to perform battery maintenance if any of the following conditions are met:

- It is recommended to perform battery maintenance for the smart battery every 50 times of battery cycle.
- The idle time of the smart battery reaches 3 months.
- Occasionally, there are situations that affect the lifespan of the smart battery. In this case, you can try maintenance and repair.
- The Autel Enterprise App reminds you when the smart battery needs maintenance.

The following battery maintenance check items are available for the smart battery:

1. Perform a standard charge and discharge operation on the smart battery.
2. Insert the smart battery into the aircraft and turn on the power. Check the battery information through the Autel Enterprise App, whether the voltage difference between the battery cells is less than 0.1 V, and whether the battery firmware is up to date.
3. Check whether the smart battery is bulged, leaked, or damaged.
4. Check the battery connector for dirt, damage, or rust.

5.5.2 Standard Charging and Discharging Process

Use the maintenance charging mode of the original charger, and proceed as follows:

1. Use the battery charger included in the standard aircraft kit to charge the smart battery to 100% and let the battery sit for 1 hour.
2. Insert the smart battery into the aircraft to fly, control the aircraft to land when the remaining battery level is less than 20%, and then take out the battery.
3. Let the smart battery sit for 8 hours.
4. After the above operations are completed, a standard battery charging and discharging operation is completed.

5.5.3 Smart Battery Replacement Standards

- There are obvious bulges, leakage, and damage on the smart battery surface.
- Damage to or irreparable rust on the metal contacts at the power supply interface of the smart battery.
- After the number of cycles of the smart battery reaches 200, it is recommended to replace the battery with a new one.
- After 2 consecutive standard charge and discharge operations, if the abnormal battery still cannot be repaired, it is recommended to replace it with a new one.

5.5.4 Recycling the Smart Battery

- If the smart battery is discarded due to damage, leakage, or other issues that compromise the integrity of the battery shell, it is recommended to completely immerse the battery in an

insulated bucket filled with 5% salt water for more than 48 hours until the battery is completely discharged.

- If the smart battery is normally retired, confirm that it is completely discharged, and then properly recycle it according to local lithium battery waste disposal policies to avoid environmental pollution.

Important

- When the smart battery catches fire, please use solid fire extinguishers such as sand or dry powder extinguishers.

Chapter 6 Autel Enterprise App

6.1 Software Introduction

The Autel Enterprise App is a flight control software developed by Autel Robotics for enterprise applications. The software integrates a variety of professional functions to quickly get started and improve efficiency; through a variety of built-in intelligent flight functions, it can realize highly intelligent aircraft operations and empower industry applications. Cooperating with the Autel Enterprise App, the aircraft can be widely used in public safety, inspection, and other industries. Also, it supports multiple mission modes such as waypoint missions, rectangular missions, and polygonal missions.

Note

- More mission modes will be available after subsequent app and firmware updates, and some UI interfaces may differ due to version updates.

6.2 Main Interface

After pairing the remote controller with the aircraft, open the Autel Enterprise App, and you will automatically enter the main interface.

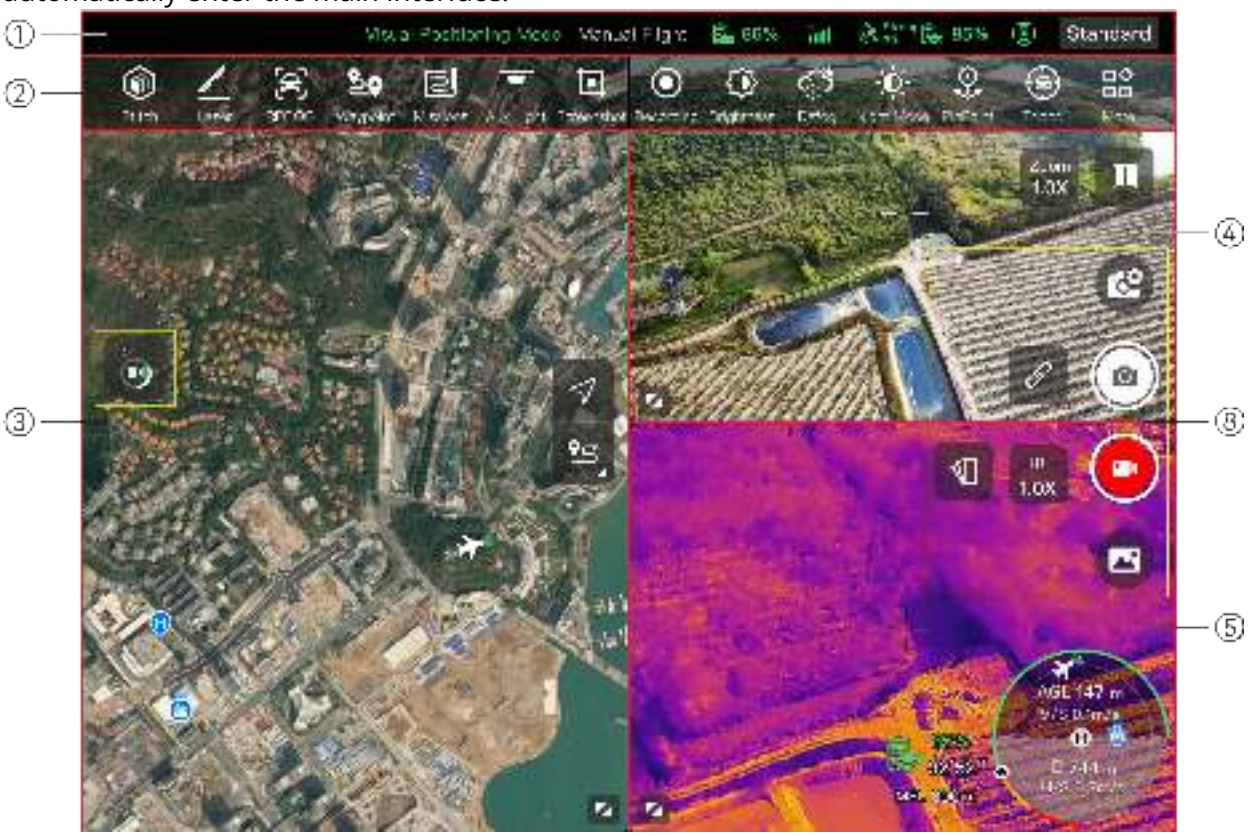

Fig 6-1 Main Interface of the Autel Enterprise App (Fusion 4T Gimbal)

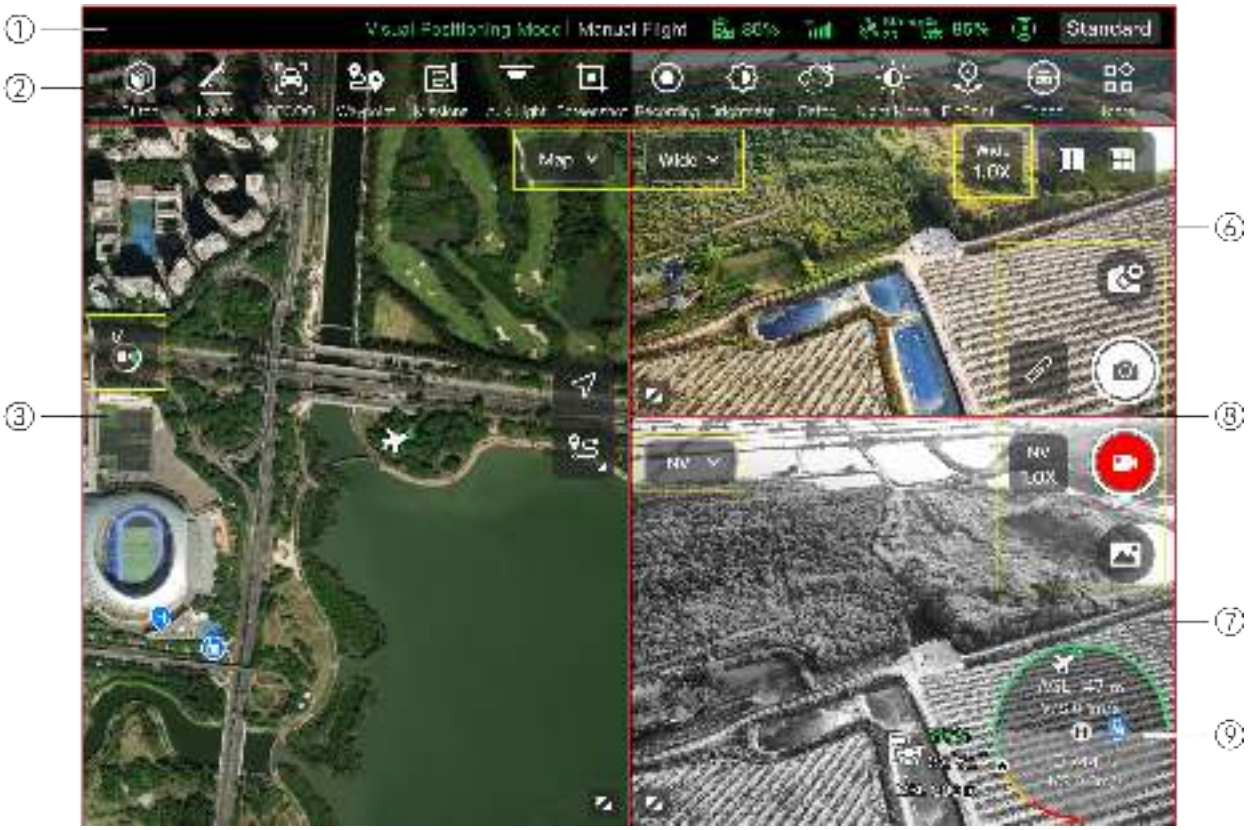

Fig 6-2 Main Interface of the Autel Enterprise App (Fusion 4N Gimbal)

Table 6-1 Details of the Main Interface of the Autel Enterprise App

No.	name	Description
1	Status Notification Bar	Displays the flight mode, warning information, flight status, battery level of the remote controller and aircraft, remote controller signal, operating status of the obstacle avoidance system, and other information.
2	Shortcut Toolbar	Offers quick access to certain frequently used functions.
3	"Map" Preview Interface	Offers access to a full-screen map interface. You can freely scroll on the interface to view the map.
4	“Zoom” Preview Interface	Provides access to the full-screen interface of the zoom camera.
5	"Infrared" Preview Interface	Offers access to the full-screen interface of the thermal camera.
6	"Wide Angle" Preview Interface	Offers access to the full-screen interface of the wide angle camera.
7	"Night Vision" Preview Interface	Offers access to the full-screen interface of the night vision camera.
8	Camera Function	Offers access to the functions related to camera control,

	Area	settings viewing, and gimbal camera switching.
9	Attitude Ball	Displays real-time flight-related data of the aircraft to assist in flight.

Tip

- The Autel Enterprise App can automatically identify the gimbal camera model mounted on the aircraft and adjust the display content of the main interface accordingly. When an aircraft with a different gimbal camera model is connected to the remote controller, the display content on the main interface of the Autel Enterprise App may vary.

Table 6-2 Multi-Screen Switching Operations on the Main Interface

No.	Icon	Meaning	Description
1		Dual-Screen Mode	Tap this icon to enter the dual-screen mode. Fusion 4T Gimbal: The left and right sides of the remote controller screen can display any two of the three preview interfaces, which are "Map", "Zoom", and "Infrared". Fusion 4N Gimbal: The left and right sides of the remote controller screen can display any two of the four preview interfaces, which are "Map", "Wide Angle", "Night Vision", and "Infrared".
2		Three-Screen Mode	Tap this icon to enter the three-screen mode. The Autel Enterprise App defaults to the three-screen mode. Fusion 4T Gimbal: The left side of the remote controller screen displays the "Map" preview interface, the upper-right side displays the "Zoom" preview interface, and the lower-right side displays the "Infrared" preview interface. Fusion 4N Gimbal: The left side of the remote controller screen defaults to the "Map" preview interface, the upper-right side defaults to the "Wide Angle" preview interface, and the lower-right side defaults to the "Night Vision" preview interface. Each preview interface can be switched to the "Infrared" preview interface.

3		Four-Screen Mode	Tap this icon to enter the four-screen mode. This mode is only supported by Fusion 4N Gimbal. In the four-screen mode, the upper-left side of the remote controller screen displays the "Wide Angle" preview interface, the lower-left side displays the "Map" preview interface, the upper-right side displays the "Night Vision" preview interface, and the lower-right side displays the "Infrared" preview interface.
4		Maximize Window	Tap this icon to adjust a preview interface to the corresponding full-screen interface.

Fig 6-3 Display of the Autel Enterprise App in Four-Screen Mode (Fusion 4N Gimbal)

Tip

- In any camera interface or camera preview interface, you can swipe up anywhere to hide all function icons and swipe down to restore the display of function icons.

6.3 Status Notification Bar

Fig 6-4 Status Notification Bar of the Autel Enterprise App

Table 6-3 Details of the Status Notification Bar of the Autel Enterprise App

No.	Icon	Meaning	Description
1		Status and Fault Warning	Displays the current warning information of the aircraft: ➢ Gray indicates that the remote controller is not connected to the aircraft. ➢ Orange indicates a medium-level warning. In this case, the aircraft will not be prohibited from taking off but should pay attention to flight safety. ➢ Red indicates a high-level warning. In this case, the aircraft will be prohibited from taking off and can take off only after you solve the fault.
2		Flight Status	Displays the current flight status. There are 3 modes: GNSS mode, visual positioning mode, and ATTI mode. For more information, see "3.9.1 Flight Status" in Chapter 3.
3		Mission Status	Displays the current mission type and mission status of the aircraft.
4		No SD Card	Indicates that there is no microSD card installed in the aircraft currently.
5		Remote Controller Battery	Displays the current battery level of the remote controller.
6		Remote Controller Signal Status	1. Displays the current communication signal status between the remote controller and the aircraft. 2. Tap this icon to display the specific signal status: When the signal is 3-5 grids, the remote controller signal is displayed as strong. When the signal is 1-2 grids, the remote controller signal is displayed as weak. 3. When the remote controller is not connected to the aircraft, the remote controller signal is displayed in gray color.
7		GNSS Signal Status	1. Displays the current GNSS positioning signal status of the aircraft. 2. Tap this icon to display the specific signal status and satellite connection status. 3. If the aircraft receives no GNSS signal, the GNSS signal is displayed in gray color.

8		Aircraft Battery	1. Displays the current battery information of the aircraft. 2. Tap this icon to display the battery level, voltage, and temperature of the aircraft battery.
9		Obstacle Avoidance System	Displays the current activation status of the aircraft obstacle avoidance system. ➢ Green indicates that the obstacle avoidance system is activated. ➢ Red indicates that the obstacle avoidance system is deactivated.
10	Standard	Speed Mode Display	Displays the current speed mode of the aircraft. Four modes are available, that is, Slow mode, Smooth mode, Standard mode, and Ludicrous mode. For more information about the speed modes, see "3.9.2 Flight Modes" in Chapter 3.

6.4 Shortcut Toolbar

The shortcut toolbar is displayed at the bottom of the system status notification bar of the Autel Enterprise App, which allows you to quickly activate certain functions.
In the shortcut toolbar, you can long press and drag the function icons to customize the sorting. At the same time, you can also tap on the "" icon to enter "Shortcuts" and then tap on the "" icon on the right side of "Shortcuts" to add a function icon into or delete a function icon from the shortcut toolbar.

Tip
● You can add a maximum of 14 function icons to the shortcut toolbar.

Fig 6-5 Shortcut Toolbar

Table 6-4 Shortcut Toolbar Details

No.	Icon	Name	Description
1		Stitch	Tap this icon to configure the remote controller to connect to a server with 2D and 3D mapping software installed, which allows for fast mapping.
2		Laser	Tap this icon to automatically measure the distance from the target point at the center of the lens to the aircraft, as well as the target point's altitude and coordinates (longitude and latitude).
3		RECOG	Tap this icon to intelligently identify the target object type.
4		Waypoint	Tap this icon to enter the "Waypoint" mission editing interface.
5		Missions	Tap this icon to enter the “Missions” interface, where you can query, edit, favorite, and delete previously saved historical flight missions.
6		Aux Light	Tap this icon to turn on the bottom LED auxiliary light, which can assist in landing and enhance the aircraft's visual sensing capabilities in weak-light

			environments.
7		Screenshot	Tap this icon to capture the current screen in a screenshot.
8		Recording	Tap this icon to start recording the current screen.
9		Brightness	Tap this icon to move the slider left and right to adjust the brightness of the camera.
10		Defog	Tap this icon to make the shooting or recording scene more transparent and enhance color contrast, which is used to eliminate the "fogging phenomenon" in the picture or the lack of picture clarity caused by smog.
11		Night Mode	Tap this icon to enter night shooting mode. Even when shooting in a low-light environment, the picture will remain clear.
12		PinPoint	Tap this icon to display information such as the latitude, longitude, and altitude of the target point selected on the image transmission interface.
13		Tripod	Tap this icon, and the aircraft will automatically lock onto the selected target.
14		More	Tap this icon to enter the “Shortcuts”, where you can view all shortcut function icons.
15		Edit Shortcuts	Tap this icon to add function icons from "Shortcuts" to the "Shortcut Toolbar" or move the function icons in the "Shortcut Toolbar" to "Shortcuts".
16		Strobe	Tap this icon to turn on the strobe on the top of the aircraft fuselage.
17		Bypass	Tap this icon to quickly set the OA mode of the aircraft to "Bypass".
18		Stealth	Tap this icon, and the aircraft will turn off the arm lights, strobes, and auxiliary bottom lights.
19		Rectangle	Tap this icon to enter the "Rectangle" mission editing interface.
20		Polygon	Tap this icon to enter the "Polygon" mission editing interface.

21		Record	Tap this icon to record real-time attitude, motion, and other parameters of the aircraft and gimbal camera during a flight mission, which allows for repeating the operation process for the next mission.
22		Album	Tap this icon to view materials from the aircraft's album and the local album and download or delete them.
23		Fusion	Tap this icon to display the infrared contour features of the target in night vision photos. This function is only supported by the EVO Max 4N aircraft.
24		Professional Imagery	Tap this icon to make professional settings for the gimbal camera parameters.
25		Live-RC	Tap this icon to set live streaming of real-time aerial videos from the aircraft. Two streaming methods, that is, RTMP and GB28181, are supported.
26		Support	Tap this icon to enter the "Personal Center" interface.
27		Settings	Tap this icon to enter the “Settings” interface.
28		Flight Log	Tap this icon to view the flight logs of the aircraft or synchronize them to a third-party platform. To use this function, you need to log in to your Autel account.
29		Encrypt	Tap this icon to set a security password for encrypting captured media materials.
30		Log	Tap this icon to query the flight logs of the aircraft. To use this function, you need to log in to your Autel account.

6.5 “Settings” Interface

On the main interface of the Autel Enterprise App, tap the “” icon on the right side of the shortcut toolbar, and then tap the “” icon to enter the "Settings" interface.
In the "Settings" interface, you can set parameters such as flight control, obstacle avoidance, remote controller, image transmission, battery, and gimbal.

6.5.1 Flight Control Parameter Setting

In the sidebar of the “Settings” interface, tap the "" icon to enter the "Flight Control Parameter Setting" interface, where you can set the relevant flight control parameters for the aircraft, as shown below.

Fig 6-6 "Flight Control Parameter Setting" interface

■ Set RTH Altitude

Tap the "RTH Altitude" edit box and enter the value. When executing an auto-return, the aircraft will rise to the RTH altitude before starting the return process.

⚠ Warning

- Although the Autel Enterprise App allows you to set a flight altitude within the range of 20-800 meters, this does not mean that the set altitude complies with local laws and regulations.
- The RTH altitude should be set higher than the altitude of obstacles within the flight operation area.
- The RTH altitude setting should comply with local (within the flight operation area) laws and regulations.
- For information about adjusting the RTH altitude of the aircraft, see “2.7.4 Auto-return Mechanism” in Chapter 2.

■ Turn On/Off Altitude Limit

Tap the button on the right side of "Altitude Limit" to turn on or off the altitude limit function.

➢ If this function is turned on, enter the altitude limit value in the edit box of “Altitude Limit (20-800m)” that pops up below, and the aircraft can rise up to the maximum altitude specified.

- If this function is turned off, the aircraft can keep ascending according to your operation until the battery is exhausted.

Tip

- The altitude limit should not be set lower than the RTH altitude value.
- The altitude limit setting should comply with local (within the flight operation area) laws and regulations. Flying the aircraft in an unsuitable flight altitude may have legal risks. Please comply with the fight safety requirements of relevant areas during flight operations.

■ Turn On/Off Distance Limit

Tap the button on the right side of "Distance Limit" to turn on or off the distance limit function.

- If this function is turned on, enter the distance limit value in the edit box of "Distance Limit (20-5000m)" that pops up below, and the aircraft will fly within a circle with the take-off point as the center and the distance limit value as the radius.
- If this function is turned off, the aircraft can keep moving according to your operation until the battery is exhausted.

Tip

- Appropriate altitude limit and distance limit settings can improve flight safety.

■ Set Flight Mode

Tap the "Flight Mode" drop-down list, and then select the appropriate mode from Slow, Smooth, Standard, and Ludicrous, that is, set the default speed mode every time you open the Autel Enterprise App. For the meaning of each mode, see “3.9.2 Flight Modes” in Chapter 3.

■ Set Home Point

Tap “Aircraft” or “RC” to set the home point.

- If "Aircraft" is selected, the home point is the position where the aircraft took off this time.
- If "RC" is selected, the home point is the current position of the remote controller.

Note

- If the home point is not set, the aircraft will record the take-off point as the default home point.

■ Calibrate Compass/ IMU

Perform the calibration operation as instructed in the Autel Enterprise App. For more information, see “2.11 Aircraft Calibration” in Chapter 2.

■ Set Lost Action

Tap the drop-down list of "Lost Action" to set the aircraft actions when disconnected.

Lost action refers to the action that the aircraft will perform when the aircraft is disconnected from the remote controller during flight. By default, the lost action is set to “Return to Home”.

- If “Return to Home” is selected, when the aircraft disconnects, the aircraft will automatically return to the home point.
- If "Hovering" is selected, when the aircraft disconnects, the aircraft will hover at the current position.
- If "Land" is selected, when the aircraft disconnects, the aircraft will land at the current position.

Tip

- When the aircraft is disconnected from the remote controller, the aircraft will decelerate. If the connection is not restored after 4 seconds, the aircraft will execute the “Lost Action”.
- When the aircraft initiates a return to home due to a disconnection, even if the aircraft re-connects to the remote controller, it will continue the return process. In this case, you can short press the "Pause" button on the remote controller to pause the return process or long press the "Pause" button for 2 seconds to exit the return process to regain control of the aircraft.

6.5.2 OA Settings

In the sidebar of the “Settings” interface, tap the "" icon to enter the "OA Settings" interface, where you can set the OA system, brake distance, warning distance, radar display, obstacle detection notification sound, landing protection, and OA mode of the aircraft, as shown below.

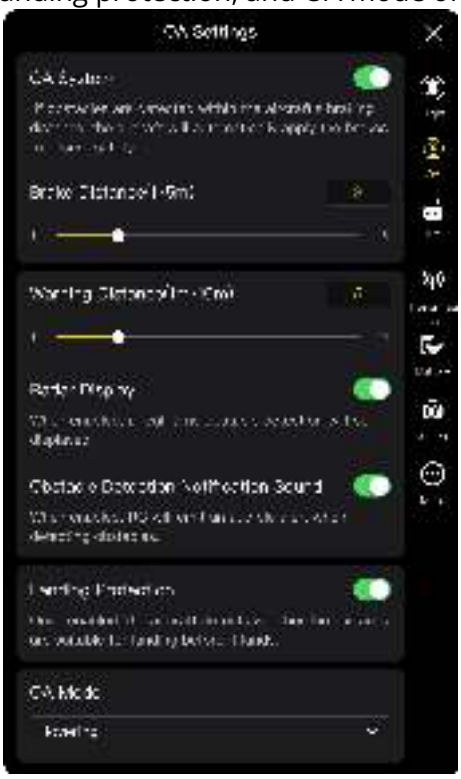

Fig 6-7 "OA Settings" Interface

■ Turn On/Off OA System

Tap the button to the right of "OA system" to turn on/off the OA system function.

- If this function is turned on, you can set the brake distance. Enter a value in the edit box to the right of “Brake Distance (1-5m)” that pops up below, or adjust the value by moving the slider below left and right. When the aircraft detects an obstacle, it will stop at the brake distance as set.
- If this function is turned off, when the aircraft detects an obstacle, it will not stop.

Warning

- To ensure flight safety, it is recommended to always turn the OA system on.
- When the flight mode of the aircraft is set to “Ludicrous”, the OA system function is unavailable.

■ Set Warning Distance

Enter a value in the edit box to the right of "Warning Distance (1m-10m)", or adjust the value by moving the slider below left and right. If the aircraft detects an obstacle, it will send a warning at the warning distance as set.

■ Turn On/Off Radar Display

Tap the button to the right of "Radar Display" to turn on or off the radar display function.

- If this function is turned on, when the aircraft detects an obstacle, it will provide risk warnings on the camera interface based on the set brake/warning distance.
- If this function is turned off, when the aircraft detects an obstacle, it will not provide risk warnings on the camera interface.

■ Turn On/Off Obstacle Detection Notification Sound

Tap the button to the right of "Obstacle Detection Notification Sound" to turn on or off the obstacle detection notification sound function.

- If this function is turned on, when the aircraft detects an obstacle, it will emit an audible alert.

■ Turn On/Off Landing Protection

Tap the button to the right of "Landing Protection" to turn on or off the landing protection function.

- If this function is turned on, the aircraft will detect whether the ground surfaces are suitable for landing before it lands.

Tip

- After the landing protection function is turned on, if the aircraft detects that the ground surface is not suitable for landing, it will keep hovering over the landing point. In this case, you need to use the command sticks to manually control the aircraft to land at an appropriate location.

■ OA Mode

Select the desired OA mode from the drop-down list of "OA Mode".

After the OA mode is set, the aircraft will perform the corresponding action when detecting obstacles. The default OA mode is "Hovering".

- If "Hovering" is selected, when the aircraft detects an obstacle during flight, it will hover at the current position.

➢ If "Bypass" is selected, when the aircraft detects an obstacle during flight, it will select an optimal path to bypass the obstacle.

Note
● In the current version, when the OA mode is set to "Bypass", the aircraft will ascend to an altitude that allows it to bypass obstacles. In future versions, the aircraft will have the capability to prioritize bypassing obstacles from the left or right side of the obstacles.

6.5.3 RC Settings

In the sidebar of the “Settings” interface, tap the "" icon to enter the "RC Settings" interface, where you can set the stick mode, RC custom buttons, and EXP, and calibrate the remote controller, as shown below.

Fig 6-8 “RC Settings” Interface

■ Set Stick Mode

Tap "Stick Mode" and select one of the three stick modes, that is, Mode 1, Mode 2, and Mode 3, according to your preferences. For the differences between the three stick modes, see "4.10.1 Stick Modes" in Chapter 4. The default stick mode is Mode 2.

■ Calibrate the Remote Controller

Perform the calibration operation as instructed in the Autel Enterprise App. For more information, see “4.13 Calibrating the Remote Controller” in Chapter 4.

■ Set RC Custom Button C1/C2

Tap "RC Custom Button", and then tap the drop-down list of C1 or C2, and select the customized function according to your needs. For more information, see “4.11.1 Custom Keys C1 and C2” in Chapter 4.

■ Set EXP

After tapping "EXP", drag the coordinate system curves of "Ascend - Descend", "Turn Right – Turn Left", and “Forward/Move Right – Backward/Move Left” according to your needs, or input coefficients (in the range of 0.2-0.7) in each edit box.

The X-axis is the physical output of the command stick, and the Y-axis is the logical output of the command stick. That is, the X-axis represents the movement generated by the current command stick move, and the Y-axis represents the actual response strength of the current aircraft.

When the coefficient is 0.2, the slope of the curve increases gradually, which is convenient for fine-tuning; when the coefficient is 0.7, the slope of the curve gradually decreases, and the aircraft responds strongly when the command stick is slightly moved. Tap "Reset EXP Parameters" to reset the EXP parameters.

■ Connect to Aircraft

- Connect to aircraft: If the remote controller is currently not connected to the aircraft, tap "Connect to aircraft", and then double-click the power button of the aircraft according to the pop-up notification to complete the frequency pairing between the remote controller and the aircraft. For more information, see “4.9 Frequency Pairing With the Remote Controller” in Chapter 4.
- Cancel: If the remote controller is currently connected to the aircraft, tap "Connect to aircraft", and then tap “Cancel” in the pop-up window to disconnect the remote controller from the aircraft.

6.5.4 Image Transmission Settings

In the sidebar of the “Settings” interface, tap the "" icon to enter the "Image Transmission Settings" interface, where you can set the image transmission mode, transmission frequency band, and split screen effect, as shown below.

Fig 6-9 "Image Transmission Settings" Interface

■ Set Image Transmission Mode

Tap the drop-down list of "Image Transmission Mode" and select “Smooth” or “HD” according to your needs. Once selected, the remote controller will receive and display the image transmission screen at the selected resolution.

Tip
● “Smooth” means 720P and "HD" means 1080P.

■ Set Transmission Frequency Band

Tap the drop-down list of "Transmission Frequency Band" and select a transmission frequency band according to your needs.

- Auto: The optimal transmission frequency band is automatically selected for image transmission between the aircraft and the remote controller.
- 2.4G: The 2.4 GHz frequency band is used for image transmission between the aircraft and the remote controller.
- 5.8G: The 5.8 GHz frequency band is used for image transmission between the aircraft and the remote controller.

■ Set Split Screen Effect

Tap the drop-down list of "Split Screen Effect", and select “Uniform Scale” or “Fit the Screen” according to your needs.

- Uniform Scale: In dual-screen mode, the image transmission screen is proportionally reduced.
- Fit the screen: In dual-screen mode, the image transmission screen is stretched to cover the screen.

Tip
● The split screen effect settings are only effective when the remote controller is in dual-screen mode.

6.5.5 Aircraft Battery

In the sidebar of the “Settings” interface, tap the "" icon to enter the "Battery Information" interface, where you can view the basic information of the current aircraft battery (that is, smart battery), set the battery warning threshold, and enable the hot swap battery function, as shown below.

Fig 6-10 **"Battery Information" Interface**

■ View Basic Information of the Smart Battery

Here, you can view the real-time status of the battery and the estimated flight time of the aircraft with the current battery level. Please refer to the parameters in the following table to view the basic information of the battery, so as to deal with it in time when the battery condition is not good.

Table 6-5 Power Parameter Details

Parameter	Description
Battery Level	If the battery level is higher than or equal to the critically low battery warning threshold and lower than or equal to the low battery warning threshold. In this case, there will be an orange warning. If the battery level is lower than or equal to the critically low battery warning threshold, there will be a red warning.
Temperature	The temperature range is -10°C-70°C. 6°C ≤ battery temperature ≤ 69°C, the temperature is normal. -10°C ≤ battery temperature ≤ 5°C, the temperature is low, and there will be an orange warning. If the battery temperature is lower than or equal to -10°C, the temperature is too low and there will be a red warning. If the battery temperature is ≥70°C, the temperature is too high and there will be a red warning.
Voltage	Normal voltage range: 10.8-17V. When it exceeds the normal range, there will be a red warning.
Discharge Times	The normal range of the number of discharges is 0-200 times. When it exceeds the normal range, there will be a red warning.

■ Set Battery Warning Threshold

Move the slider left or right to set warning thresholds for low battery and critically low battery.

- Critically Low Battery Warning: Red status. The adjustable range is from 8% to 25%.
- Low Battery Warning: Orange status. The adjustable range is from 15% to 50%. The low battery warning threshold should be at least 5% higher than the critically low battery warning threshold.

■ Hot Swap Battery

After enabling the hot swap battery function as needed, you make the smart battery hot-swappable without shutting down the aircraft, thus eliminating the waiting time for a restart.

Tip

- After the hot swap battery function is enabled, the aircraft will be powered by an internal supercapacitor to maintain low-power mode when the battery is disconnected. To prevent battery replacement failure, it is recommended to complete the battery replacement within 10 seconds.
- The battery replacement time generally ranges from 10 to 40 seconds and may vary depending on ambient temperatures. In low-temperature environments (-10°C), battery replacement may fail.

6.5.6 Gimbal Settings

In the sidebar of the “Settings” interface, tap the "" icon to enter the "Gimbal Settings" interface, where you can set the gimbal pitch sensitivity and extended pitch angle, or calibrate and adjust the gimbal, as shown below.

Fig 6-11 "Gimbal Settings" Interface

■ Set Gimbal Pitch Sensitivity

Enter a value in the edit box to the right of "Gimbal Pitch Sensitivity", or move the slider left or right to adjust the value, so as to set the number of degrees the gimbal rotates on the pitch axis per second (unit: °/second).

■ Turn On/Off Extended Pitch Angle

Tap the button to the right of "Extended Pitch Angle" to turn on the upward gimbal rotation function.

- If this function is turned on, the gimbal can rotate up to 30 degrees above the level baseline.
- If this function is turned off, the gimbal can only maintain a level or downward rotation and cannot rotate upwards to switch to a pitch view.

■ Gimbal Calibration

When there is an abnormality in the gimbal, tap "Gimbal Calibration", and then tap the "Start calibration" button, and the gimbal will automatically start calibrating. For more information, see “2.11.3 Gimbal Calibration” in Chapter 2.

■ Gimbal Adjustment

When the position of the gimbal tilts, tap “Gimbal Adjustment” and tap the buttons under the functions of “Roll”, “Yaw”, and “Pitch” to adjust the gimbal, so that the horizontal and vertical axes on the screen remain aligned to the reference objects on the three-screen image transmission screen.

■ Gimbal Parameters Reset

Tap the "Gimbal Parameters Reset" button, and then tap the "Confirm" button to reset the gimbal parameters.

6.5.7 More

In the sidebar of the “Settings” interface, tap the “⊕” icon to enter the "More" interface, where you can configure unit settings, light settings, safety, target recognition settings, and the language settings of the Autel Enterprise App for the aircraft and manually check for updates to the App or firmware.

Fig 6-12 "More" interface

■ Unit Settings

Tap "Units Settings", and then set "Speed/Distance Units", "Area Units", "Temperature Units", and "Coordinate Format" according to your needs. After the setting, the Autel Enterprise App will display relevant parameters in the specified units.

■ Light Settings

Tap "Light Settings", and then set "Stealth", "Strobe", and “Aux Light” according to your needs.

- Turn On/Off Stealth Mode

Tap the button to the right of "Stealth" to turn on or off stealth mode.

➢ If stealth mode is turned on, the arm lights, strobe, and auxiliary bottom light will be turned off by default.
➢ If stealth mode is turned off, you can configure the strobe and auxiliary bottom light.

⚠ **Warning**
● Turning off the arm lights and strobe may violate local laws and regulations. Only turn on stealth mode when necessary.

- Turn On/Off Strobe

Tap the button to the right of "Strobe" to turn on or off the strobe on the top of the fuselage.

⚠ **Warning**
● When flying at night, please turn on the strobe to ensure flight safety. ● Do not look directly at the strobe while they are on to avoid vision damage caused by strong light.

- Set Aux Light

Tap the drop-down list of "Aux Light" and then select “Auto”, “On”, or “Off” according to your needs.

➢ If “Auto” is selected, the auxiliary bottom light is automatically turned on or off according to ambient brightness.
➢ If "On" is selected, the auxiliary bottom light is always on by default.
➢ If "Off" is selected, the auxiliary bottom light is off by default.

Tip
● The auxiliary bottom light is mainly used to enhance the ambient brightness of the landing point during the landing of the aircraft, improve the sensing performance of the downward visual sensing system, and ensure landing safety.

■ Turn On/Off Visual Positioning

Tap “Safety”, and then tap the button to the right of "Visual Positioning" to turn on or off the visual positioning function.

➢ If the visual positioning function is turned on, the aircraft will hover in a place with a poor GNSS signal.

Tip

- Turning on visual positioning is a must to enter visual positioning mode. For more information, see “3.9.1 Flight Status” in Chapter 3.

■ Turn On/Off GNSS

Tap “Safety”, and then tap the button to the right of "GNSS" to turn on or off the GNSS positioning function.

➢ If "Auto" is selected, the aircraft will automatically select the best GNSS positioning signal.

➢ If "Beidou" is selected, the aircraft will only receive GNSS positioning signals from the BeiDou Navigation Satellite System.

Warning

- For non-specialized operations, it is recommended to always turn on GNSS positioning. GNSS positioning can enhance the flight safety of the aircraft.
- When GNSS positioning is turned on and the aircraft are flying in an environment with good lighting and rich texture, the aircraft will enter the visual positioning mode.
- When GNSS positioning is turned off and the aircraft are flying in an environment with poor lighting or insufficient texture, the aircraft will enter the ATTI mode. In this mode, the aircraft has high safety risks and is prone to flight accidents.
- If you choose to turn off the GNSS positioning function and this leads to flight accidents or aircraft damage, Autel Robotics will not provide warranty services. Instead, you should be responsible for any related accidents on your own.
- The "Beidou" navigation mode is a specific function for China. In other regions, "Auto" is selected by default to automatically select the GNSS positioning signal. After switching the navigation mode, you must restart the aircraft for the changes to take effect.
- After the GNSS positioning function is turned off, the aircraft cannot turn on the auto-return function.

■ Turn On/Off Submit Flight Data to CAAC

Tap "Safety", and then tap the button to the right of "Submit Flight Data to CAAC" to turn on or off the function of submitting flight data to CAAC.

Important

- It is recommended to turn on the function of submitting flight data to CAAC. According to Chinese laws and regulations, flight data must be submitted in real time to the official system of the Civil Aviation Administration of China (CAAC) via the internet.
- When the network is poor, the relevant flight data will be cached on your local device, and the Autel Enterprise App will not store or forward the data to other services.

■ Enter Registration No.

Tap "Safety" and then tap "Registration No." to enter the real-name registration number of the aircraft.

Important

- According to Chinese laws and regulations, real-name registration is required for aircraft. For more information, see “2.1 Legal Use Notice” in Chapter 2.

■ Remote ID

Tap "Safety" and then tap "Remote ID". After entering the Remote ID, you can broadcast relevant information about the aircraft for identification by nearby devices.

Important

- According to local laws and regulations, perform real-name registration for aircraft. For more information, see “2.1 Legal Use Notice” in Chapter 2.

■ Emergency Stop Propellers During Flight

Tap "Safety" and then tap the drop-down list of "Emergency Stop Propellers During Flight" to make relevant settings according to your needs.

- If "Off" is selected, the "Emergency Stop Propellers During Flight" function will be disabled.
- If "On" is selected, you can stop the propellers of the aircraft from spinning at any time during flight by simultaneously pushing the two command sticks inward or outward.
- If "Only in case of failure" is selected, you can stop the propellers of the aircraft from spinning by simultaneously pushing the two command sticks inward or outward only in the case of aircraft malfunctions.

Important

- Please use the "Emergency Stop Propellers During Flight" function with caution. Once the propellers stop, the aircraft will fall freely without control.
- This function is only used to reduce additional harm or damage caused by aircraft malfunctions. Please stay away from crowds or buildings when using this function.
- After the "Emergency Stop Propellers During Flight" function is enabled, please stop using the aircraft and contact Autel Robotics to inspect the power system of the aircraft.

■ View Version Information

Tap "About", and you can view the firmware version and the serial number of the aircraft, remote controller, gimbal, and battery, as well as the version of the Autel Enterprise App, and check for versions and perform updates for the App and firmware.

■ Language Settings

Tap the drop-down list of “Language Settings” and choose one from Simplified Chinese, English, Traditional Chinese, Japanese, and Spanish. After you confirm the selection, the Autel Enterprise App will automatically restart and display in the chosen language.

6.6 Attitude Ball

The attitude ball is mainly used to dynamically display the relative positions of the aircraft, remote controller, and home point, and display the relevant attitude, flight speed, battery level, operating time, and other flight safety data of the aircraft. Any changes in the aircraft's status will be reflected in the attitude ball.

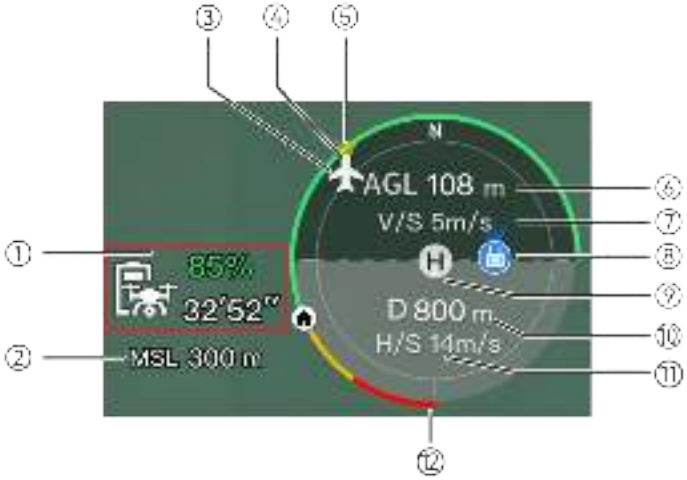

Fig 6-13 Attitude Ball

Table 6-6 Attitude Ball Details

No.	Description	Description
1	Estimated Remaining Flight Time of the Aircraft	Displays the current remaining battery level and estimated remaining flight time of the aircraft.
2	MSL Altitude	Refers to the current altitude of the aircraft relative to the mean sea level (MSL).
3	Aircraft Position	Displays the current position of the aircraft, which can help you observe the approximate position between the aircraft and the remote controller.
4	Aircraft Heading	Displays the current nose orientation of the aircraft. If the aircraft is no longer visible in the line of sight, the aircraft can be controlled to return to the home point based on the position and heading of the aircraft.
5	Gimbal Direction	Displays the current gimbal orientation of the aircraft.
6	Vertical Altitude	Refers to the current vertical altitude of the aircraft relative to the take-off point.
7	Vertical Speed	Refers to the current vertical flight speed of the aircraft.
8	Remote Controller Location	Displays the current position of the remote controller, which can help you observe the approximate position between the

		aircraft and the remote controller.
9	Home Point	Refers to the set home point of the aircraft.
10	Horizontal Distance	Refers to the current horizontal distance from the aircraft to the take-off point.
11	Horizontal Speed	Refers to the current horizontal flight speed of the aircraft.
12	Aircraft Battery	Displays the real-time remaining battery level of the aircraft in the dynamic circular battery bar.

6.7 "Map" Interface

On the main interface of the Autel Enterprise App, tap the " " icon in the corner of the "Map" preview interface, or tap the "Map" mini window in the lower-left corner after entering the "Zoom Camera" interface, "Thermal Camera" interface, "Night Vision Camera" interface, or "Wide Angle Camera" interface, to enter the "Map" full-screen interface.

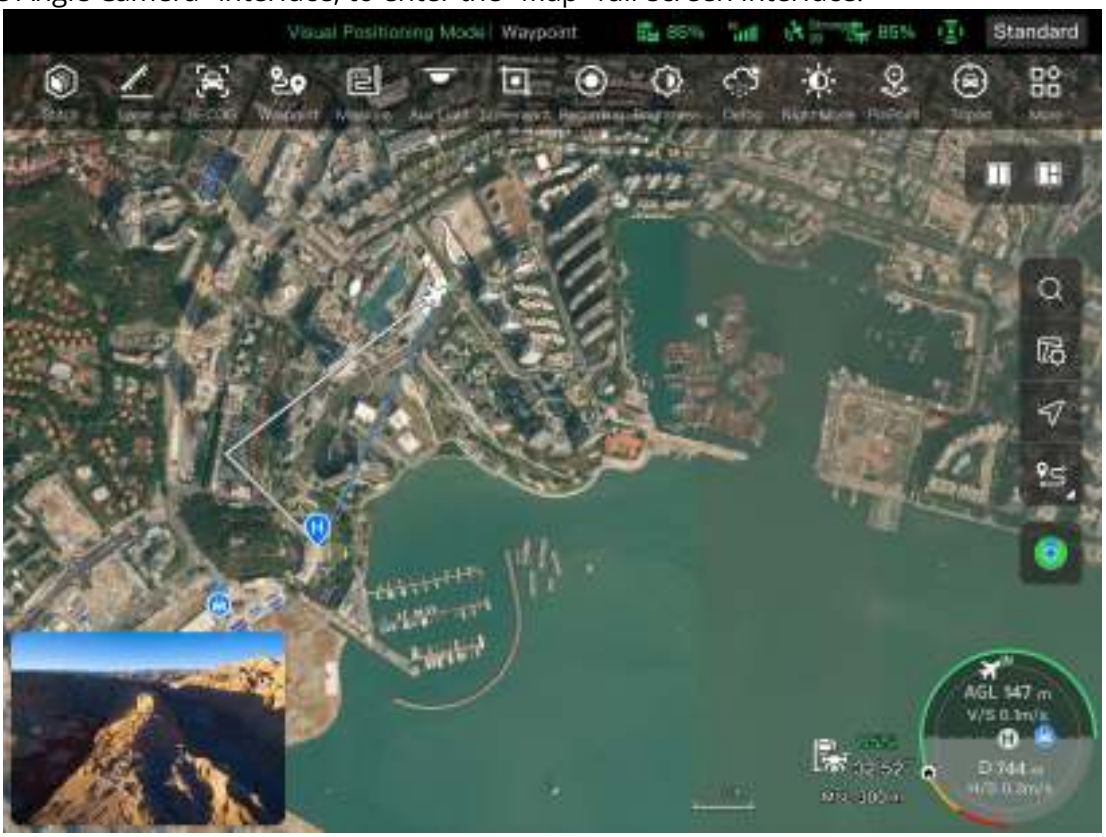

Fig 6-14 "Map" Interface

Table 6-7 Interface Button Details

No.	Icon	Name	Description
1		Search Map	When the remote controller is connected to the Internet, tap this icon and enter the desired

			location name in the “Search Map” edit box. Based on the selected location, the map interface will switch to display the map of the corresponding location.
2		Map Management	Tap this icon to adjust the map display style to a standard map or a hybrid map, as well as to set “Display/Clear Flight Path” and import GEO-fence. ➢ Standard: 2D map. ➢ Hybrid: 2D map and satellite map combined.
3		Orientation Lock	This icon indicates that the display direction of the map is locked. When the remote controller is rotated, the display direction of the map will not change accordingly. Tap this icon to unlock the display direction of the map of the current remote controller.
4		Orientation Unlock	This icon indicates that the display direction of the map is unlocked. When the remote controller is rotated, the display direction of the map will change accordingly. Tap this icon to lock the display direction of the map of the current remote controller.
5		Overview	Tap this icon to simultaneously locate the positions of the remote controller, the home point, and the aircraft on the map.
6		Remote Controller Location	Tap this icon to locate the position of the remote controller on the map.
7		Home Point Location	Tap this icon to locate the position of the home point on the map.
8		Aircraft Position	Tap this icon to locate the position of the aircraft on the map.
9		Re-center	If the map is moved from the current positioning point to another location, this icon will appear on the right side of the screen. Tap this icon, and the map will quickly return to the current positioning point.
10		Aircraft Search	When the aircraft is lost, you can tap this icon to query the location information of the lost aircraft.

6.8 Camera Interfaces

6.8.1 Camera Function Area

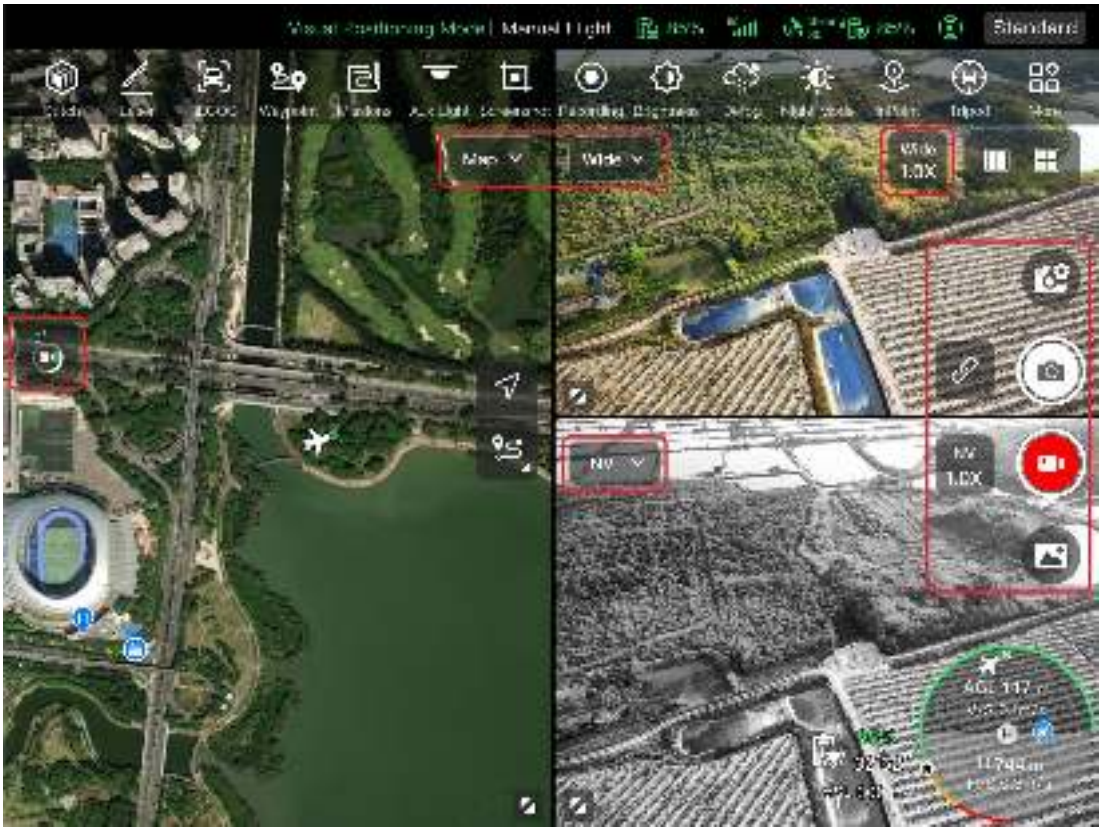

Fig 6-15 Camera Function Area

Table 6-8 Camera Menu Details

No.	Icon	Meaning	Description
1	Zoom	Switch to Zoom Camera	On any camera interface, tap this icon to enter the zoom camera interface.
2	IR	Switch to Thermal Camera	On any camera interface, tap this icon to enter the thermal camera interface.
3	Wide	Switch to Wide Angle Camera	On any camera interface, tap this icon to enter the wide angle camera interface.
4	NV	Switch to Night Vision Camera	On any camera interface, tap this icon to enter the night vision camera interface.
5		Camera Settings	Tap this icon to view and set parameters related to the gimbal camera.
6		Photo	Tap this icon to take a photo.

7		Video	Tap this icon to start recording.
8		Album	Tap this icon to view materials from the aircraft's album and the local album and download or delete them.
9	Zoom 1.0X	Zoom Camera Zoom	On the "Zoom Camera" interface, tap this dynamic icon to adjust the zoom factor of the zoom camera.
10	IR 1.0X	Thermal Camera Zoom	On the "Thermal Camera" interface, tap this dynamic icon to adjust the zoom factor of the infrared thermal imaging camera.
11	Wide 1.0X	Wide Angle Camera Zoom	On the "Wide Angle Camera" interface, tap this dynamic icon to adjust the zoom factor of the wide angle camera.
12	NV 1.0X	Night Vision Camera Zoom	On the "Night Vision Camera" interface, tap this dynamic icon to adjust the zoom factor of the night vision camera.
13		Linked Zoom	Tap this icon to adjust the zoom factor of any camera, and other cameras will also adjust their zoom factors simultaneously, resulting in the synchronous enlargement or reduction of camera images. Fusion 4T Gimbal: The zoom camera needs to be adjusted to 2.4x before the thermal camera starts to zoom synchronously. Fusion 4N Gimbal: The wide angle camera needs to be adjusted to 2.2x before the thermal camera starts to zoom synchronously; the wide angle camera needs to be adjusted to 2.4x before the night vision camera starts to zoom synchronously; the wide angle camera can be adjusted to a maximum of 16x, the thermal camera can be zoomed synchronously up to 3.9x, and the night vision camera can be zoomed synchronously up to 3.6x.
14	0°	Gimbal 0°	Tap this icon, and the gimbal returns to the horizontal centering state.
15	45°	Gimbal 45°	Tap this icon, and the gimbal rotates obliquely downward, forming an angle of 45° with the horizontal direction.

16	90°	Gimbal 90°	Tap this icon, and the gimbal rotates directly downward, forming an angle of 90° with the horizontal direction.

On any camera interface, tap the "" icon to enter the "Camera Settings" interface. On the “Camera Settings” interface, you can perform the following operations:

■ View Photo Properties

On the “Camera Settings” interface, tap the "" icon to view the size and format of (zoom/wide angle) photos.

■ Set Video Properties

On the “Camera Settings” interface, tap the "" icon to view the resolution, frame rate, and format of (zoom/wide angle) videos and set video encoding.

➢ Video encoding options are H.264 and H.265. The default option is H.264.

■ View Night Vision Shooting Properties

On the “Camera Settings” interface, tap the "NV" icon to view the size of night vision photos and videos.

➢ Video encoding options are H.264 and H.265. The default option is H.264.

■ Set Infrared Shooting

On the “Camera Settings” interface, tap the "IR" icon to view the size and format of infrared photos or videos and set the image mode and radiometric measurement function.

- Set Image Mode

Two image modes are available, that is, “Manual” and “Auto”.

➢ If the “Manual” mode is set, you can adjust the "Contrast" and "Brightness" by entering a value or tapping the numbers on the left and right sides.

- Turn On/Off Radiometric Measurement

Tap the button to the right of "Radiometric Measurement" to turn on or off the radiometric measurement function.

➢ If this function is turned on, you can set the image enhancement, isotherm, emissivity, and temperature alarm.

➢ If this function is turned off, both "Radiometric Measurement Mode" and "FFC " cannot be set.

1. Turn On/Off Image Enhancement

Tap the button to the right of "Image Enhancement" to turn on or off the image enhancement function.

➢ If this function is turned on, you can enter a value in the edit box below or drag the slider left or right to set the image enhancement value. The larger the value, the clearer the image details.

2. Set Isotherm

Four isotherm statuses are available, that is, “Off”, “Human”, “Fire”, and “Custom”.

➢ If “Custom” is selected, you can set the minimum and maximum temperature of the radiometric measurement range.

3. Set Emissivity

Enter a value in the edit box to the right of "Emissivity" or drag the slider below left or right to adjust the emissivity value.

4. Turn On/Off Temperature Alarm

Tap the button to the right of "Temperature Alarm" to turn on or off the temperature alarm function.

- ➢ You can set the minimum and maximum temperature for temperature alarms.

■ Advanced Settings

On the “Camera Settings” interface, tap the "⋯" icon to perform advanced settings for the camera:

- Select Camera

Tap "Select Camera" to select the lens used for shooting from the list of lenses of the gimbal camera. You can select one or more lenses.

- ➢ After a shooting lens is selected, when you tap the "📷" or "🎥" icon, the selected lens will simultaneously take photos or record videos. For unselected lenses, the shooting function will be unavailable.

- Set Grid

Three grid styles are available, which can assist with picture composition during shooting. You can select one or more grid styles.

- ➢ When multiple grid styles are selected, the grid styles will be superimposed and displayed on all camera interfaces.

- Set Defog

Defogging can make the shooting or recording scene more transparent and enhance color contrast and is used to eliminate the "fogging phenomenon" in the picture or the lack of picture clarity caused by smog.

- ➢ Three defog intensities are available, that is, “Weak”, “Medium”, and “Strong”. The stronger the defog intensity, the darker the image.

- Turn On/Off Stamps/Subtitles

Tap the button to the right of "Stamps/Subtitles" to turn on or off the stamps/subtitles function.

- ➢ If this function is turned on, you can set the time stamp, latitude & longitude and altitude, and aircraft SN functions. Once this function is enabled, the shot images will include the set stamp.

- Turn On/Off Arm Lights (When Shooting)

Tap the button to the right of "Turn off arm lights when shooting" to turn on or off this function.

- ➢ If this function is turned on, the arm lights will be turned off when shooting.
- ➢ If this function is turned off, the arm lights will be turned on when shooting.

- Turn On/Off Pre-recording

Tap the button to the right of "Pre-recording" to turn on or off this function.

- ➢ If this function is turned on, the aircraft will start recording 15 seconds in advance (tap the "🎥" icon).

Tip
● The pre-recording function can prevent missing important shots when the aircraft is flying rapidly.

- Turn On/Off Histogram

Tap the button to the right of "Histogram" to turn on or off the histogram function. The histogram can display the distribution of pixels in the images captured by the camera, thereby reflecting the exposure of the images.

- ➢ If the histogram function is turned on, a floating "Histogram" window will be generated on the screen of the remote controller, and you can drag the "Histogram" window to any area on the screen. Tap the "Close" button in the upper-right corner of the window to turn off the histogram function.

- Set Storage Location

You can choose "SD Card" or "Internal Storage" as the storage location. Also, you can view the storage status of "SD Card" and "Internal Storage" and tap "Format" on the right side to format the corresponding storage location.

- Reset Camera Parameters

Tap the "Reset" button to the right of “Camera Reset” to restore the camera parameters to default settings.

- View Camera Model

You view the gimbal camera model.

6.8.2 “Zoom Camera” Interface

On the main interface of the Autel Enterprise App, tap the " " icon in the corner of the "Zoom Camera" preview interface, or tap the " " icon after entering the "Thermal Camera" interface, to enter the "Zoom Camera" full-screen interface.

Fig 6-16 “Zoom Camera” Interface

■ Adjust the Zoom Factor

When shooting, tap the " " dynamic icon, and the zoom factor setting window will pop up. A maximum of 160x hybrid zoom is supported. You can drag up and down or tap the number on

the left to set the zoom factor according to your needs to zoom in and out on the shooting picture, so as to flexibly shoot objects at different distances.

■ Camera Settings

Tap the "" icon to enter the "Camera Settings" interface and perform relevant settings. For more information, see "6.8.1 Camera Function Area" in this chapter.

Tip
● Aircraft equipped with a Fusion 4T Gimbal can display the zoom camera interface after connecting to the remote controller.

6.8.3 "Thermal Camera" Interface

On the main interface of the Autel Enterprise App, tap the "" icon in the corner of the "Thermal Camera" preview interface, or tap the "" icon after entering the "Zoom Camera" interface or "Night Vision Camera" interface, to enter the "Thermal Camera" full-screen interface.

Fig 6-17 "Thermal Camera" Interface

Table 6-9 "Thermal Camera" Interface Details

No.	Icon	Meaning	Description
1		Thermal Color	Tap this icon, and the drop-down list of "Thermal Color" pops up. You can scroll up and down in the

			list to select a color palette.
2	-20-150 Mode	Radiometric Measurement Mode	High gain mode (-20°C to 150°C), which enables more accurate radiometric measurement.
3	0-550 Mode	Radiometric Measurement Mode	Low gain mode (0°C to 550°C), which has a larger radiometric measurement range.
4	FFC	FFC Calibration	Flat-Field Calibration. After calibration, the image quality of thermal imaging will be optimized, and temperature changes will be easier to observe.

Warning

- While shooting, do not aim the infrared thermal imaging camera at strong energy sources such as the sun, lava, laser beams, and molten metal, to avoid damaging the infrared detector.
- The temperature of the measured target should be within 600°C. Over-temperature measurements can cause burns and damage to the infrared detector.

■ Set Thermal Color

After tapping the "" icon, you can scroll up and down in the pop-up drop-down list to select a color palette.

➢ After selection, the images from the thermal camera will be displayed in the color style of the selected color palette.

■ Set Infrared Shooting

Tap the "" icon to enter the "Camera Settings" interface and perform relevant settings. For more information, see “6.8.1 Camera Function Area” in this chapter.

■ Set Radiometric Measurement Mode

Tap the "" icon or the "" icon to switch between radiometric measurement modes.

➢ High gain mode (-20°C to 150°C): This mode has higher radiometric measurement accuracy but a smaller radiometric measurement range compared with the low gain mode.

➢ Low gain mode (0°C to 550°C): This mode has a larger radiometric measurement range but lower radiometric measurement accuracy compared with the high gain mode.

■ FFC Calibration

Tap the "" icon to enable the FFC calibration function.

Note

- The radiometric measurement mode and FFC calibration functions can be used only after the infrared radiometric measurement function is enabled in the camera settings.

■ Adjust the Infrared Zoom Factor

While shooting, tap the "" dynamic icon, and the infrared zoom factor setting window will pop up. You can drag up or down to zoom in or out on the picture captured by the thermal camera, so as to flexibly shoot objects at different distances.

Tip
● The thermal cameras of Fusion 4T Gimbal support up to 16x digital zoom, while the thermal cameras of Fusion 4N Gimbal support up to 8x digital zoom.

6.8.4 "Night Vision Camera" Interface

On the main interface of the Autel Enterprise App, tap the "" icon in the corner of the "Night Vision Camera" preview interface, or tap the "" icon after entering the "Wide Angle Camera" interface or "Thermal Camera" interface, to enter the "Night Vision Camera" full-screen interface.

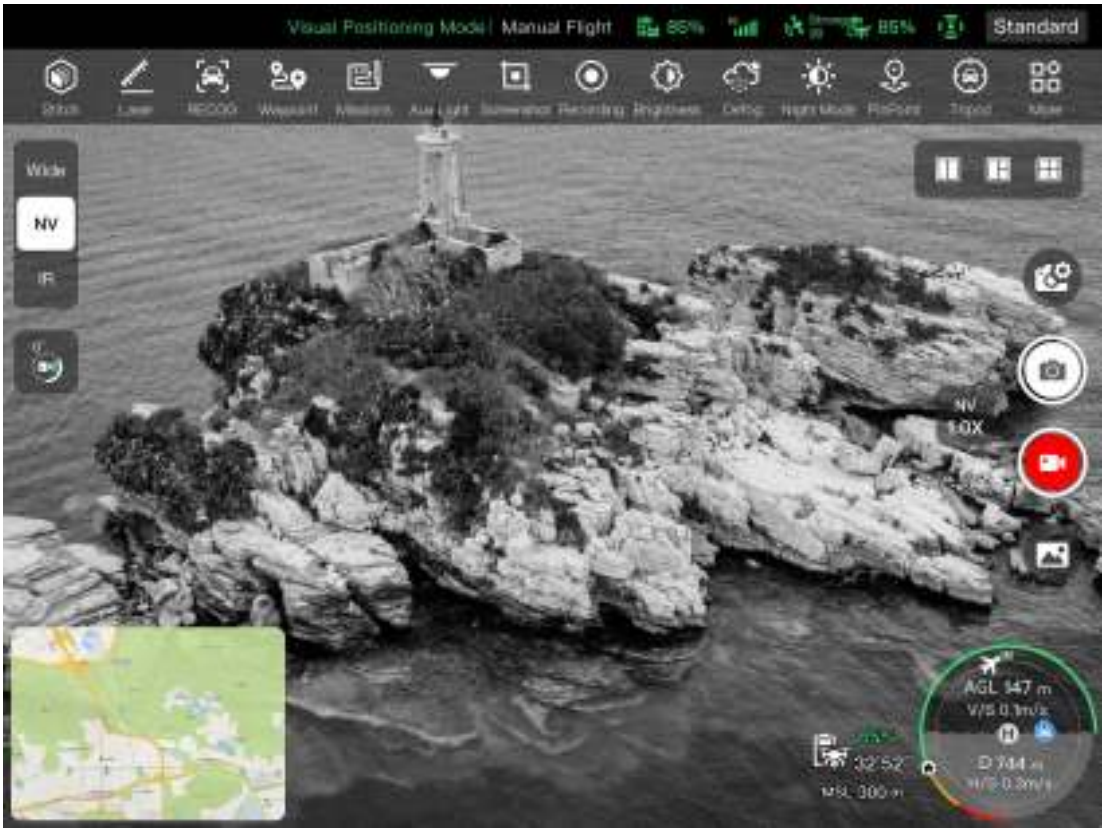

Fig 6-18 "Night Vision Camera" Interface

■ Adjust the Night Vision Zoom Factor

While shooting, tap the "" dynamic icon, and the night vision zoom factor setting window will pop up. A maximum of 8x digital zoom is supported. You can drag up or down to zoom in or out on the picture captured by the night vision camera, so as to flexibly shoot objects at different distances.

■ Camera Settings

Tap the "" icon to enter the "Camera Settings" interface and perform relevant settings. For more information, see “6.8.1 Camera Function Area” in this chapter.

Tip
● Aircraft equipped with Fusion 4N Gimbal can display the night vision camera interface after connecting to the remote controller.

6.8.5 “Wide Angle Camera” Interface

On the main interface of the Autel Enterprise App, tap the "" icon in the corner of the "Wide Angle Camera" preview interface, or tap the "" icon after entering the "Night Vision Camera" interface or “Thermal Camera” interface, to enter the "Wide Angle Camera" full-screen interface.

Fig 6-19 “Wide Angle Camera” Interface

■ Adjust the Wide Angle Zoom Factor

While shooting, tap the "" dynamic icon, and the wide angle zoom factor setting window will pop up. A maximum of 16x digital zoom is supported. You can drag up or down to zoom in or out on the picture captured by the wide angle camera, so as to flexibly shoot objects at different distances.

■ Camera Settings

Tap the "" icon to enter the "Camera Settings" interface and perform relevant settings. For more information, see "6.8.1 Camera Function Area" in this chapter.

Tip

- Aircraft equipped with Fusion 4N Gimbal can display the wide angle camera interface after connecting to the remote controller.

6.9 Flight Missions

Flight missions are divided into waypoint missions, rectangle missions, and polygon missions in terms of type. You can tap the corresponding icon in the shortcut toolbar or toolbox to enter the relevant mission editing interfaces.

Important

If any of the following conditions are detected, the flight mission will end automatically, and the aircraft will perform other operations according to the following conditions:

- Low battery power: A notification will pop up on the Autel Enterprise App to inform you that the aircraft will return to the home point automatically.
- Critically low battery power: The aircraft will end its mission and automatically land at its current position.
- During a flight mission, if the remote controller is powered off, the aircraft will execute the lost action that you set.

Tip

- When the aircraft is in visual positioning mode, it cannot execute waypoint missions, rectangle missions, or polygon missions.

6.9.1 Waypoint

In the shortcut toolbar (or Shortcuts), tap the "" icon to enter the "Waypoint" mission interface.

You can add multiple waypoints on the map. Every two neighboring waypoints connect to form a flight segment and one or more flight segments form a route. By setting the flight altitude, flight speed, camera action, and waypoint actions of each waypoint for each route and each waypoint, the aircraft will automatically fly according to the route and perform corresponding actions at each waypoint.

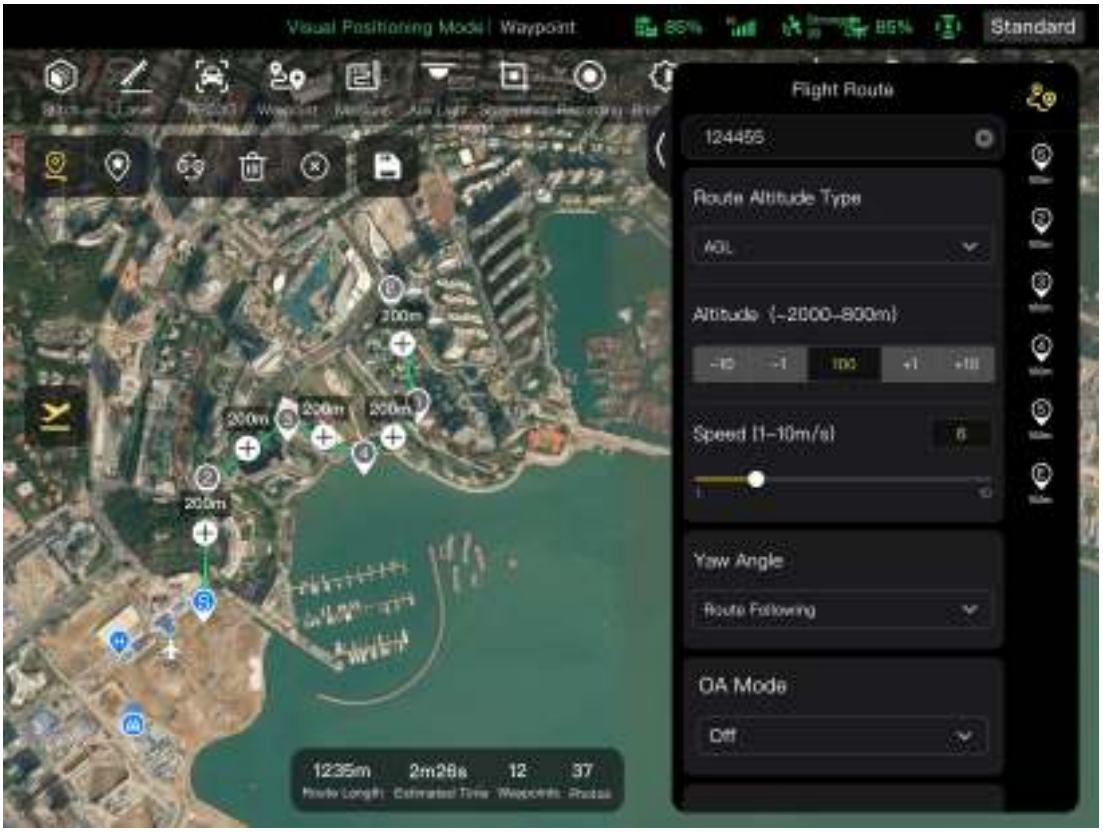

Fig 6-20 Waypoint

Fig 6-21 Waypoint Mission in Progress

Table 6-10 “Waypoint Mission” Terms and Details

Term	Definition
Relative Height	Refers to the vertical height of the aircraft relative to the take-off point.
Altitude	Refers to the vertical height of the aircraft relative to sea level.
Yaw Angle	It is used to set the position where the nose of the aircraft is facing. The default is to follow the route. When the point of interest has been added, it is often set in conjunction with the point of interest, that is, the yaw angle of the aircraft is set to turn to the point of interest.
Gimbal pitch	The observable range of the gimbal camera, that is, the angle from the top to the bottom (0° ~ 90°).
Finish Action	Refers to the actions that the aircraft will perform after finishing the waypoint mission.
Lost Action	Refers to the actions that the aircraft will perform when disconnected from the remote controller for more than 4 seconds during flight.
Segment Action	Refers to the actions performed by the camera, the gimbal, and the aircraft during the flight segment formed between the current waypoint and the next waypoint.
Waypoint Action	Refers to the actions performed by the camera, gimbal, and aircraft at a specific waypoint.

Table 6-11 "Waypoint Mission" Icons and Details

No.	Icon	Meaning	Description
1		Waypoint Settings	Tap this icon to add a waypoint on the map as needed. Every two neighboring waypoints connect to form a flight segment and one or more flight segments form a route.
2		POI Settings	Tap this icon to add a point of interest on the map as needed.
3		Heading Switch	Tap this icon, and the starting point and ending point of the whole route will change direction.
4		Delete	When the aircraft is in waypoint setting status, tapping this icon once will delete the latest waypoint but cannot delete points of interest. When the aircraft is in POI setting status, tapping this icon once will delete the latest point of interest but cannot delete waypoints.

5		Clear	Tap this icon and then tap the "Confirm" button to clear all waypoints and POIs.
6		Save Route	Tap this icon, and the currently edited waypoint mission will be saved to “Mission”.
7		Edit Route	Tap this icon to edit the saved route missions.
8		Execute Mission	Tap this button, and the aircraft will enter the "Pre-flight Check" interface. After the check is completed, the aircraft will take off to perform the waypoint mission.
9		Pause Mission	When executing a waypoint mission, tap this icon, and the aircraft will pause the waypoint mission and hover at the current position.
10		Exit Mission	Tap this icon, and the aircraft will abort the current waypoint mission and automatically return.

■ Add Waypoints

On the waypoint mission interface, tap the “ ” icon, find the starting point for the mission on the map and tap it to create the first waypoint, and then repeat the previous operation to create multiple waypoints as required.

When adding waypoints, the waypoint mission settings interface will pop up on the right side of the waypoint mission interface.

Tip

- A route must include at least two waypoints: a starting point ( ) and an ending point ( ).
- To set a waypoint position more precisely, you can enter the waypoint coordinates under "Waypoint Coordinates" on the waypoint settings interface.

Tap the " " icon in the upper-right corner of the waypoint settings interface to enter the route settings interface.

Tap the waypoint icon on the right side of the waypoint settings interface to enter the corresponding waypoint settings interface.

■ Set Route Name and Route Altitude Type

On the route settings interface:

- Tap the "Route Name" edit box and enter the name as required to set the name of a route.
- Tap the drop-down list of "Route Altitude Type" and select “AGL” or “MSL” to set the altitude type of the entire route.

■ Set Flight Altitude

In the "Flight Altitude" edit box on the route settings interface, directly enter the flight altitude value or tap the shortcut buttons on the left and right sides to adjust the integer value. This way, you set the flight altitude of the entire route.

On the waypoint settings interface, the flight altitude is set to “Align Route” by default. After deselecting “Align Route”, in the "Flight Altitude" edit box, directly enter the flight altitude value or tap the shortcut buttons on the left and right sides to adjust the value. This way, you set the flight altitude of the aircraft at the current waypoint.

Tip

- The maximum value for the flight altitude setting will be dynamically adjusted according to the altitude limit set in the "Flight Control Parameter Setting".

■ Set Flight Speed

In the "Flight Speed" edit box on the route settings interface, directly enter the flight speed value or move the slider below left or right to adjust the value. This way, you set the flight speed of the entire route.

On the waypoint settings interface, the flight speed is set to “Align Route” by default. After deselecting “Align Route”, in the "Flight Speed" edit box, directly enter the flight speed value or move the slider below left or right to adjust the value. This way, you set the flight speed of the aircraft at the current waypoint.

Tip

- The flight speed setting ranges from 1 to 10 m/s.

Note

- After take-off, the aircraft will gradually adjust its "flight altitude" and "flight speed" to the set values while flying to this waypoint.

■ Set Yaw Angle

On the route settings interface, tap the drop-down list of "Yaw Angle" to set the yaw angle of the aircraft in the entire route to “Route Following”, “Manual”, or “Custom”.

On the waypoint settings interface, the yaw angle of the aircraft is set to “Align Route” by default. After deselecting “Align Route”, tap the drop-down list of "Yaw Angle" to set the yaw angle of the aircraft at the current waypoint to “Route Following”, “Manual”, “Custom”, or “Turn to Point of Interest” (the waypoint should be associated with the point of interest).

- Route Following: If it is set to “Route Following”, the nose of the aircraft will follow the direction of the waypoint change, that is, turn from the current waypoint to the next waypoint according to the set route.
- Manual: If it is set to “Manual”, you need to use the remote controller to control the nose direction of the aircraft during the flight.
- Custom: If it is set to “Custom”, the "Yaw Angle (0°-360°)" setting item will be displayed. You can directly enter the value or tap the shortcut buttons on the left and right sides to adjust the value. After setting, the aircraft nose will be adjusted according to the set value.
- Turn to Point of Interest: If it is set to “Turn to Point of Interest”, the nose of the aircraft will always face the set POI during the flight segment where the yaw angle of the aircraft is set to "Turn to Point of Interest" when the waypoint mission is executed.

■ Set Obstacle Avoidance Mode

On the route settings interface, the obstacle avoidance mode can be set to "Bypass" or "Off".

➢ If "Bypass" is selected, the aircraft will automatically bypass obstacles.

⚠ **Warning**
● If the obstacle avoidance mode is turned off, the obstacle avoidance system of the aircraft will not be enabled. In this case, please try to choose an open area to control the aircraft.

■ Set Camera Action

On the route settings interface, tap the drop-down list of "Camera Action" to set the camera action of the entire route to “Start Recording”, “Stop Recording”, “Shoot”, “Stop Shooting”, “Timelapse”, “Distance Lapse”, and “No Action”.

On the waypoint settings interface, the segment action is set to “Align Route” by default. After deselecting “Align Route”, tap the drop-down list of "Camera Action" to set the camera action of the current flight segment to “Start Recording”, “Stop Recording”, “Shoot”, “Stop Shooting”, “Timelapse”, “Distance Lapse”, and “No Action”.

➢ When it is set to "Timelapse", the “Photo Interval” will be displayed. At this time, you can move the slider left or right to adjust the value.

➢ When it is set to "Distance Lapse", the “Photo Distance” will be displayed. At this time, you can move the slider left or right to adjust the value.

■ Set Gimbal Pitch Angle

On the route settings interface, enter the value in the edit box to the right of "Gimbal Pitch Angle (0°-90°)", or move the slider below left or right to adjust the gimbal pitch angle of the entire route.

On the waypoint settings interface, the gimbal pitch angle (segment action) is set to “Align Route” by default. After deselecting “Align Route”, enter the value in the edit box to the right of "Gimbal Pitch Angle (0°-90°)", or move the slider below left or right to adjust the gimbal pitch angle of the current segment.

■ Add a Waypoint Action

On the waypoint settings interface, tap the "Add Action +" button under “Waypoint Action” to set the camera action, gimbal pitch angle, and yaw angle for the current waypoint. You can add a maximum of 10 waypoint actions for one waypoint.

■ Set Finish Action

On the route settings interface, tap the drop-down list of "Finish Action" to set the flight action of the aircraft after completing the waypoint mission.

➢ If “Auto RTH” is selected, the aircraft will automatically return to the starting point after completing the mission.

➢ If “Hovering” is selected, the aircraft will hover at the end point after completing the mission.

■ Set Signal Loss Action

On the route settings interface, tap the drop-down list of "Signal Loss Action" to set the flight action of the aircraft after losing connection with the remote controller for 4 seconds.

➢ If "Mission Continue" is selected, the aircraft will continue to execute the mission and perform the "Finish Action" after completing the mission.

➢ If “Auto RTH” is selected, the aircraft will automatically return to the starting point.

■ Set Waypoint Coordinates

After adding a waypoint, you can automatically obtain the longitude and latitude parameters of the waypoint. You can also manually enter and modify the longitude and latitude of the waypoint.

- Under “Waypoint Coordinates” on the waypoint settings interface, the waypoint coordinates can be set in two formats: DD (Decimal Degrees) and DMS (Degrees Minutes Seconds). Tap the "Longitude" and "Latitude" edit boxes below and enter the longitude and latitude of the waypoint to complete the modification of the waypoint coordinates.
- When using the DD (Decimal Degrees) format, you can use the arrow keys located on the right side of the editing field to make fine adjustments to the longitude and latitude.

Table 6-12 Fine Adjustment of Latitude and Longitude

Parameter Type	Tap Up Arrow	Tap Down Arrow	Tap Left Arrow	Tap Right Arrow
Longitude	/	/	-0.000005	+0.000005
Latitude	+0.000005	-0.000005	/	/

■ Add Point of Interest

On the waypoint mission interface, tap the "" icon, find the specific location on the map where the POI needs to be set and tap it to create the first POI, and then repeat the previous operation to create multiple POIs as required.

When adding POIs, the POI setting interface will pop up on the right side of the waypoint mission interface.

■ Set POI Altitude

On the POI settings interface, you can set the POI altitude. POI altitude refers to the altitude of the point of interest relative to the take-off point. In the "Altitude (0-800m)" edit box, directly enter the altitude value of the point of interest or tap the shortcut buttons on the left and right sides to adjust the value to set the POI altitude.

Important

- When the point of interest is higher than the waypoint, the gimbal camera cannot look at the point of interest above.

■ Set Associated Waypoints

On the POI settings interface, tap the waypoints to be associated under "Link Waypoint(s)" to associate the current point of interest with the selected waypoints. To associate all waypoints, check the "Select All" box on the right side.

After a waypoint is associated with a point of interest, the yaw angle of the aircraft at the waypoint will not be set to “Align Route” by default. If the “Yaw Angle” of the aircraft at the waypoint is set to “Turn to Point of Interest”, the nose of the aircraft will always face the associated point of interest during the flight segment from this waypoint to the next waypoint when the waypoint mission is executed.

■ Start Pre-flight Check

After the completion of all settings for a route, relevant flight mission data will be synchronously displayed at the bottom center of the waypoint mission interface, including the route length, estimated time, waypoints, and photos to be taken. Tap the “” icon on the left side to enter the "Pre-flight Check" interface.

■ Upload a Route and Start a Mission

After completing the pre-flight check, press the “Slide to takeoff” icon at the bottom of the "Pre-flight Check" interface, and the aircraft will automatically take off to execute the mission. The estimated completion time, current photo count, current altitude, current wind speed, and other basic information will be synchronously displayed at the bottom center of the waypoint mission interface. The lower-left small screen displays the current view observed by the gimbal camera. Tap to enlarge it to full screen for viewing.

When the aircraft completes the waypoint mission, the relevant flight mission data of this route will be displayed at the bottom center of the map, including the route length, estimated time, waypoint, the number of photos taken, and the number of flights.

6.9.2 Rectangle Mission

In the shortcut toolbar (or Shortcuts), tap the "" icon to enter the "Rectangle" mission interface.

You can add a rectangular area on the map and perform operations such as dragging, scaling, and rotating to adjust the position and size of the area. After adjustments, the Autel Enterprise App will automatically generate a continuous series of equidistant flight routes within the rectangular area based on the side overlap and course angle settings. The aircraft will then automatically fly to execute the shooting mission according to these flight routes and relevant settings.

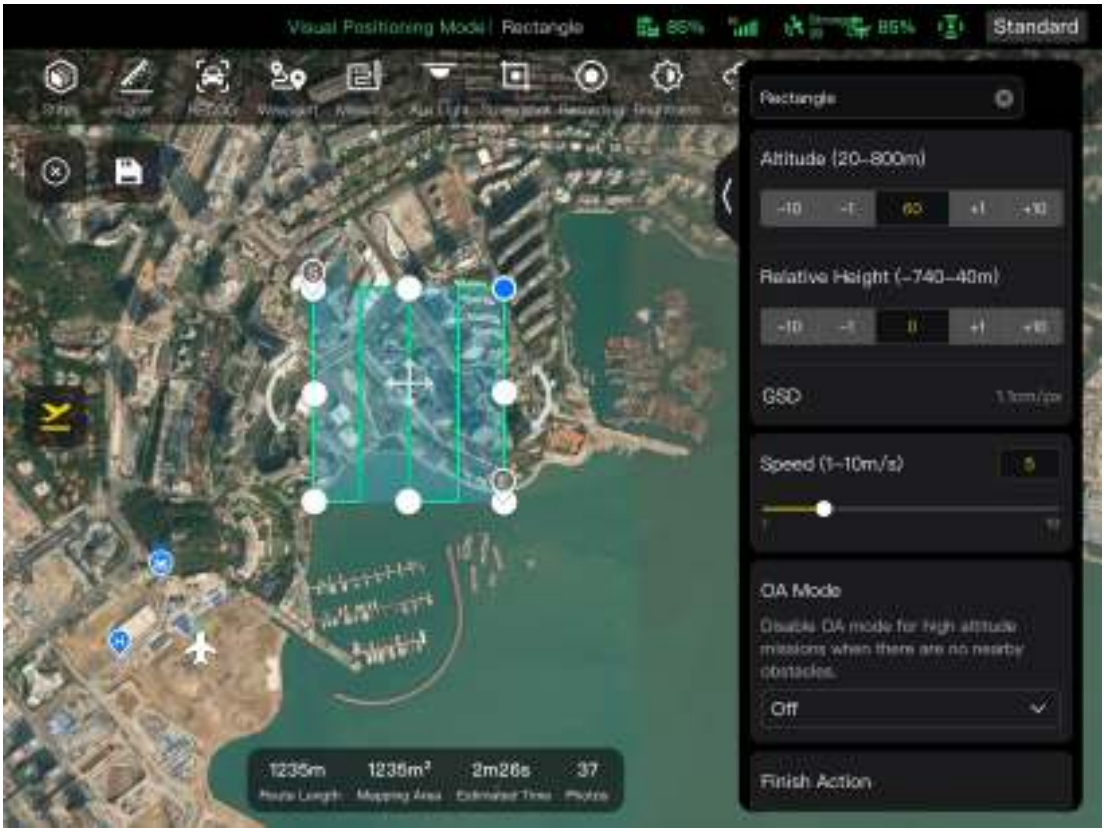

Fig 6-22 Rectangle Mission

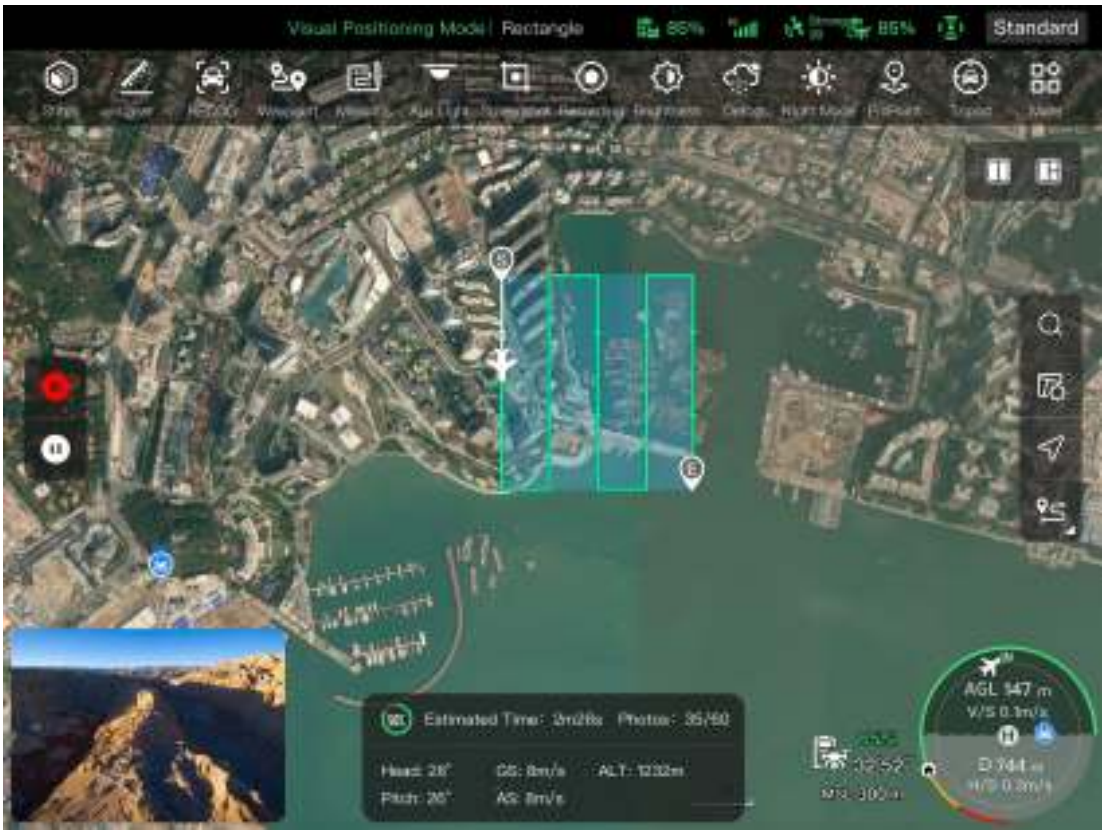

Fig 6-23 Rectangle Mission in Progress

Table 6-13 “Rectangle Mission” Terms and Details

Term	Definition
Relative Height	Refers to the vertical altitude of the work surface of the shot object relative to the take-off point of the aircraft.
GSD	Ground Sampling Distance.
Finish Action	Refers to the action that the aircraft will perform after completing a rectangle mission.
Lost Action	Refers to the actions that the aircraft will perform when disconnected from the remote controller for more than 4 seconds during flight.
Front Overlap	Refers to the image overlap rate between two consecutive photos taken when capturing images along the flight heading.
Side Overlap	Refers to the image overlap rate between two consecutive photos taken when capturing images along two adjacent flight routes.
Main Course Angle	Refers to the course angle between the main route and the latitude line (horizontal line) when the flight routes are automatically generated.
Gimbal pitch	The observable range of the gimbal camera, that is, the angle from the top to the bottom (-30° ~ 90°).
Coordinated Turns	When enabled, the aircraft will switch from one main route to an adjacent main route along the optimal arc-shaped path.

Table 6-14 "Rectangle Mission" Icons and Details

No.	Icon	Meaning	Description
1		Clear	Tap this button, and then tap the "Confirm" button in the pop-up window to reset the rectangle mission.
2		Save Route	Tap this icon, and the currently edited rectangle mission will be saved to “Mission”.
3		Edit Route	Tap this icon to edit the saved rectangle mission.
4		Execute Mission	Tap this button, and the aircraft will enter the "Pre-flight Check" interface. After the check is completed, the aircraft will take off to perform the rectangle mission.
5		Pause Mission	When executing a rectangle mission, tap this icon, and the aircraft will pause the rectangle mission and hover at the current position.

6		Exit Mission	Tap this icon, and the aircraft will abort the current rectangle mission and automatically return.

■ Add a Rectangular Area

On the map of the rectangle mission interface, find the center point of the mission to be executed and tap it to automatically generate a rectangular area. You can adjust the area of the rectangle by dragging the eight white points at the edges of the rectangle. You can drag the "cross arrow" in the center of the rectangle to move the rectangle or drag the "curved arrow" on both sides of the rectangle to rotate the rectangle around the center point.

When adding a rectangular area, the rectangle mission settings interface will pop up on the right side of the rectangle mission interface.

Tip

- A rectangular area includes two waypoints, that is, the starting point ( ) and the end point ( ).

■ Set Mission Name

On the rectangle mission settings interface:

➢ Tap the "Mission Name" edit box and enter the name as required to set the name of a rectangle mission.

■ Set Flight Altitude and Relative Height

In the "Flight Altitude (20-800m)" edit box on the rectangle mission settings interface, directly enter the flight altitude value or tap the shortcut buttons on the left and right sides to adjust the value. This way, you set the flight altitude of the rectangle mission.

The setting range of "Relative Height" will automatically be dynamically adjusted according to the flight altitude setting. In the edit box, directly enter the mission altitude value or tap the shortcut buttons on the left and right sides to adjust the value. This way, you set the relative altitude of the rectangle mission.

Tip

- The maximum value for the flight altitude setting will be dynamically adjusted according to the altitude limit set in the "Flight Control Parameter Setting".
- GSD varies with different flight altitude values.

■ Set Flight Speed

In the "Flight Speed" edit box on the rectangle mission settings interface, directly enter the flight speed value or move the slider below left or right to adjust the value. This way, you set the flight speed of the rectangle mission.

Tip

- The flight speed setting ranges from 1 to 10 m/s.

■ Set Obstacle Avoidance Mode

On the rectangle mission settings interface, the obstacle avoidance mode can be set to "Bypass" or "Off".

➢ If "Bypass" is selected, the aircraft will automatically bypass obstacles.

⚠ Warning

- If the obstacle avoidance mode is turned off, the obstacle avoidance system of the aircraft will not be enabled. In this case, please try to choose an open area to control the aircraft.

Tip

- When flying at a high altitude, if there are no obstacles, it is recommended to disable the obstacle avoidance mode.

■ Set Finish Action

On the rectangle mission settings interface, tap the drop-down list of "Finish Action" to set the flight action of the aircraft after completing the rectangle mission.

➢ If “Auto RTH” is selected, the aircraft will automatically return to the starting point after completing the mission.

➢ If “Hovering” is selected, the aircraft will hover at the end point after completing the mission.

■ Set Signal Loss Action

On the rectangle mission settings interface, tap the drop-down list of "Signal Loss Action" to set the flight action of the aircraft after losing connection with the remote controller for 4 seconds.

➢ If "Mission Continue" is selected, the aircraft will continue to execute the mission and perform the "Finish Action" after completing the mission.

➢ If “Auto RTH” is selected, the aircraft will automatically return to the starting point.

■ Advanced Settings

On the rectangle mission settings interface, tap “Advanced Settings” to enter the advanced settings interface and set the front overlap, side overlap, main course angle, and gimbal pitch angle for the rectangle mission.

- Set Front Overlap
  In the "Front Overlap(%)" edit box on the advanced settings interface, directly enter the value or move the slider below left or right to adjust the value to set the front overlap of the rectangle mission.
- Set Side Overlap
  In the "Side Overlap(%)" edit box on the advanced settings interface, directly enter the value or move the slider below left or right to adjust the value to set the side overlap of the rectangle mission.

Tip

- The setting range of the front overlap and side overlap is 10%-90%, and the default value is 70%.

- Set Main Course Angle

On the advanced settings interface, you can set the main course angle (0-359°) in two ways: “Custom” or “Auto”.

  - If “Custom” is selected, you can directly enter the value or tap the shortcut digital buttons on the left and right sides to adjust the angle between the main route of the rectangle mission and the latitude line.

- Set Gimbal Pitch Angle

On the advanced settings interface, enter the value in the edit box to the right of "Gimbal Pitch Angle (-30°-90°)", or move the slider below left or right to adjust the gimbal pitch angle of the entire route.

■ Turn On/Off Elevation Optimization

- If this function is turned on, the aircraft will create a route along the center point of the rectangle for re-shooting after completing the shooting of the main route. This helps optimize the overall shooting accuracy of the mission.

■ Turn On/Off Double Grid

- If this function is turned on, the aircraft will change its heading by 90° and shoot the rectangle mission area again after completing the shooting of the main route. The two routes have a 90° overlap.

■ Turn On/Off Route Extension

Due to the limited gimbal pitch angle and flight altitude, some areas on the outer edges of the rectangle mission area might not be captured by the camera. In such cases, you need to turn on route extension to extend the rectangle mission area so as to ensure complete coverage of the target area.

■ Turn On/Off Coordinated Turns

After this function is turned on, the aircraft will follow the optimal arc-shaped path for turns when switching from one main route to an adjacent one.

Tip
● When the obstacle avoidance mode is set to “Bypass”, the coordinated turns function does not take effect.

■ Start Pre-flight Check

After the completion of all settings for a rectangle mission, relevant flight mission data will be synchronously displayed at the bottom center of the rectangle mission interface, including the route length, mapping area, estimated time, and photos to be taken. Tap the “” icon on the left side to enter the "Pre-flight Check" interface.

■ Upload a Route and Start a Mission

After completing the pre-flight check, press the “Slide to takeoff” icon at the bottom of the "Pre-flight Check" interface, and the aircraft will automatically take off to execute the mission. The estimated completion time, current photo count, current altitude, current wind speed, and other basic information will be synchronously displayed at the bottom center of the rectangle mission interface. The lower-left small screen displays the current view observed by the gimbal camera. Tap to enlarge it to full screen for viewing.

■ Complete Route Missions

When the aircraft completes the rectangle mission, the relevant flight mission data of this route will be displayed at the bottom center of the map, including the route length, mapping area, estimated time, the number of photos taken, and the number of flights.

6.9.3 Polygon

In the shortcut toolbar (or Shortcuts), tap the "" icon to enter the "Polygon" mission interface. You can add a square area on the map and perform operations such as dragging, adding side boundaries, and dragging corner points to adjust the position and size of the area. After adjustments, the Autel Enterprise App will automatically generate a continuous series of equidistant flight routes within the polygonal area based on the side overlap and course angle settings. The aircraft will then automatically fly to execute the shooting mission according to these flight routes and relevant settings.

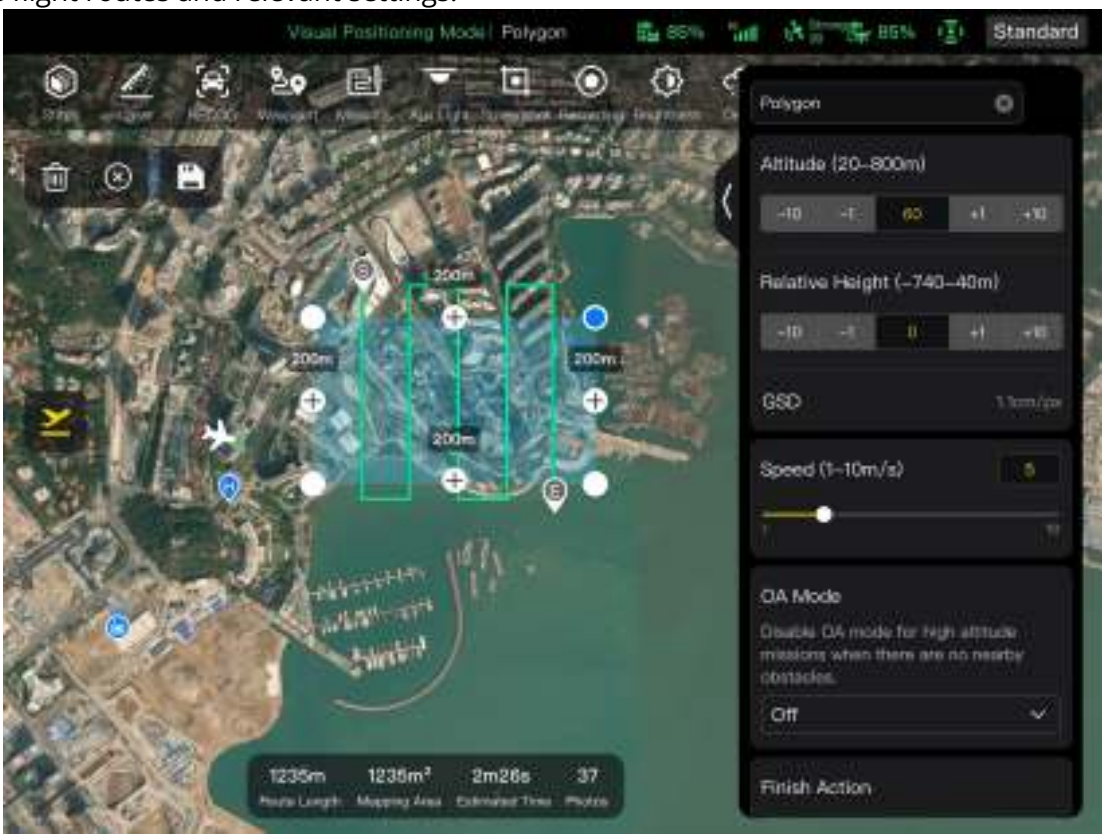

Fig 6-24 Polygon

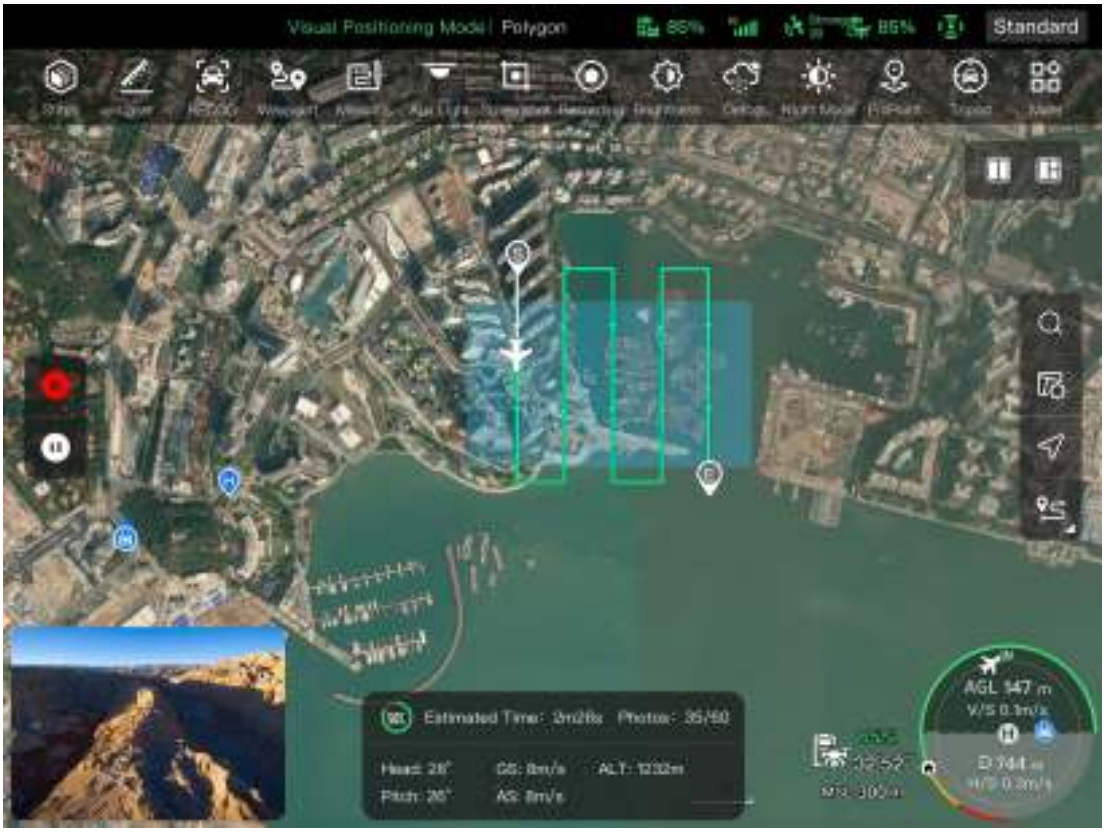

Fig 6-25 Polygon Mission in Progress

Table 6-15 "Polygon Mission" Terms and Details

Term	Definition
Relative Height	Refers to the vertical altitude of the work surface of the shot object relative to the take-off point of the aircraft.
GSD	Ground Sampling Distance.
Finish Action	Refers to the action that the aircraft will perform after completing a polygon mission.
Lost Action	Refers to the actions that the aircraft will perform when disconnected from the remote controller for more than 4 seconds during flight.
Front Overlap	Refers to the image overlap rate between two consecutive photos taken when capturing images along the flight heading.
Side Overlap	Refers to the image overlap rate between two consecutive photos taken when capturing images along two adjacent flight routes.
Main Course Angle	Refers to the course angle between the main route and the latitude line (horizontal line) when the flight routes are automatically generated.
Gimbal pitch	The observable range of the gimbal camera, that is, the angle from the top to the bottom (-30° ~ 90°).

Coordinated Turns	When enabled, the aircraft will switch from one main route to an adjacent main route along the optimal arc-shaped path.

Table 6-16 "Polygon Mission" Icons and Details

No.	Icon	Meaning	Description
1		Clear	Tap this button, and then tap the "Confirm" button in the pop-up window to reset the polygon mission.
2		Save Route	Tap this icon, and the currently edited polygon mission will be saved to "Mission".
3		Edit Route	Tap this icon to edit the saved polygon mission.
4		Execute Mission	Tap this button, and the aircraft will enter the "Pre-flight Check" interface. After the check is completed, the aircraft will take off to perform the polygon mission.
5		Pause Mission	When executing a polygon mission, tap this icon, and the aircraft will pause the polygon mission and hover at the current position.
6		Exit Mission	Tap this icon, and the aircraft will abort the current polygon mission and automatically return.

■ Add a Polygonal Area

On the map of the polygon mission interface, find the center point of the mission to be executed and tap it to automatically generate a square area. You can tap the "+" icon between two white points to add side lines for the area. You can drag the white points to adjust the positions of the corner points of the polygon, which allows you to modify the area of the polygon. You can also drag the "cross arrow" in the center of the polygonal area to move the polygon.

When adding a polygonal area, the polygon mission settings interface will pop up on the right side of the polygon mission interface.

Tip

- A polygonal area includes two waypoints, that is, the starting point ( ) and the end point ( ).
- For the settings of other operations for a polygon mission, see "6.9.2 Rectangle Mission" in this chapter.

6.9.4 Pre-flight Check

Before the aircraft starts to execute a mission, a pre-flight check is required. On the "Pre-flight Check" interface, you can preview the current status (such as battery level, battery temperature, and SD card memory) and route data of the aircraft and perform some settings such as flight parameters and obstacle avoidance settings.

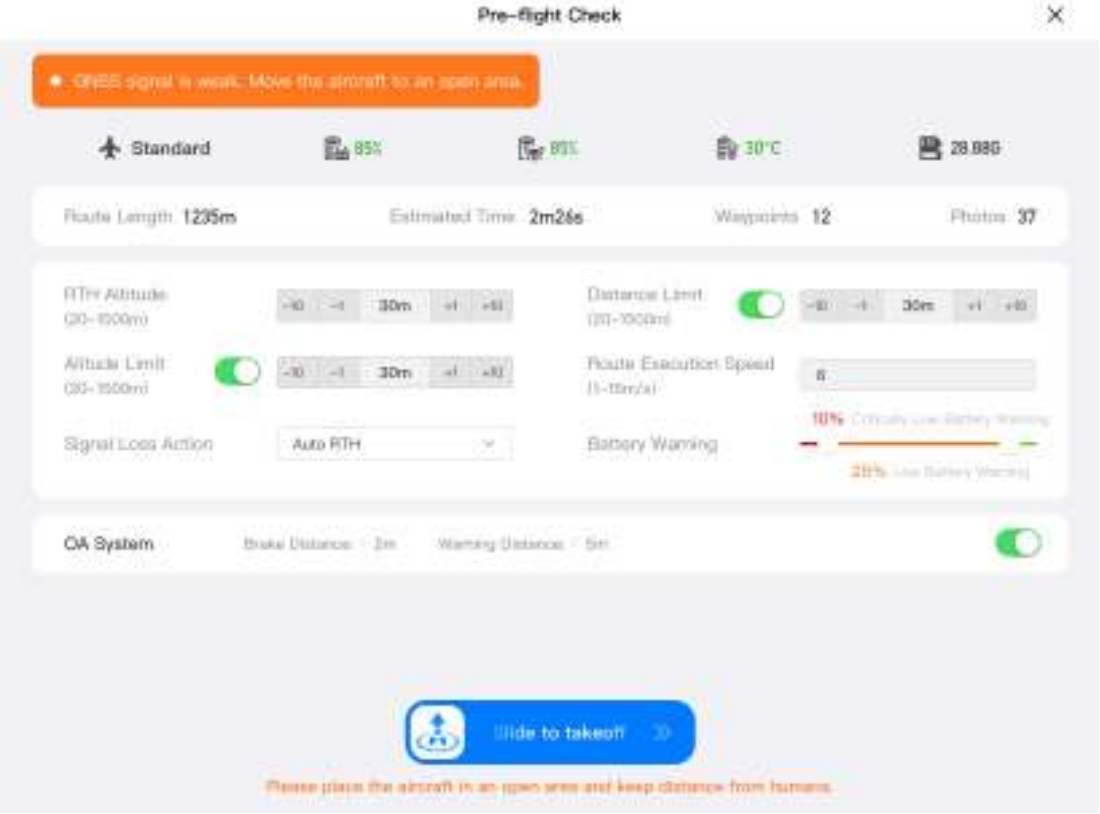

Fig 6-26 Pre-flight Check for a Flight Mission

1. On the ongoing flight mission interface, tap the "" icon on the left, and the "Pre-flight Check" interface will pop up. Please make sure that there is no fault or abnormal alarm, otherwise, you need to follow the tips to solve it.
2. Confirm aircraft status and route preview data.
3. According to different types of flight missions, set the corresponding flight parameters. If not set, the "RTH Altitude", "Distance Limit", "Altitude Limit", "Home Point Settings", and "Remote Controller" settings are based on general settings.
4. Select to enable or disable obstacle avoidance.
5. After completing the above operations, press the “Slide to takeoff” icon at the bottom of the interface.

6.9.5 Resume Mission

When an abnormal situation such as an abnormal exit occurs during a flight mission, tap the " " icon to enter the "Mission" interface. This will trigger the “Resume Mission” function, and a prompt window will pop up.

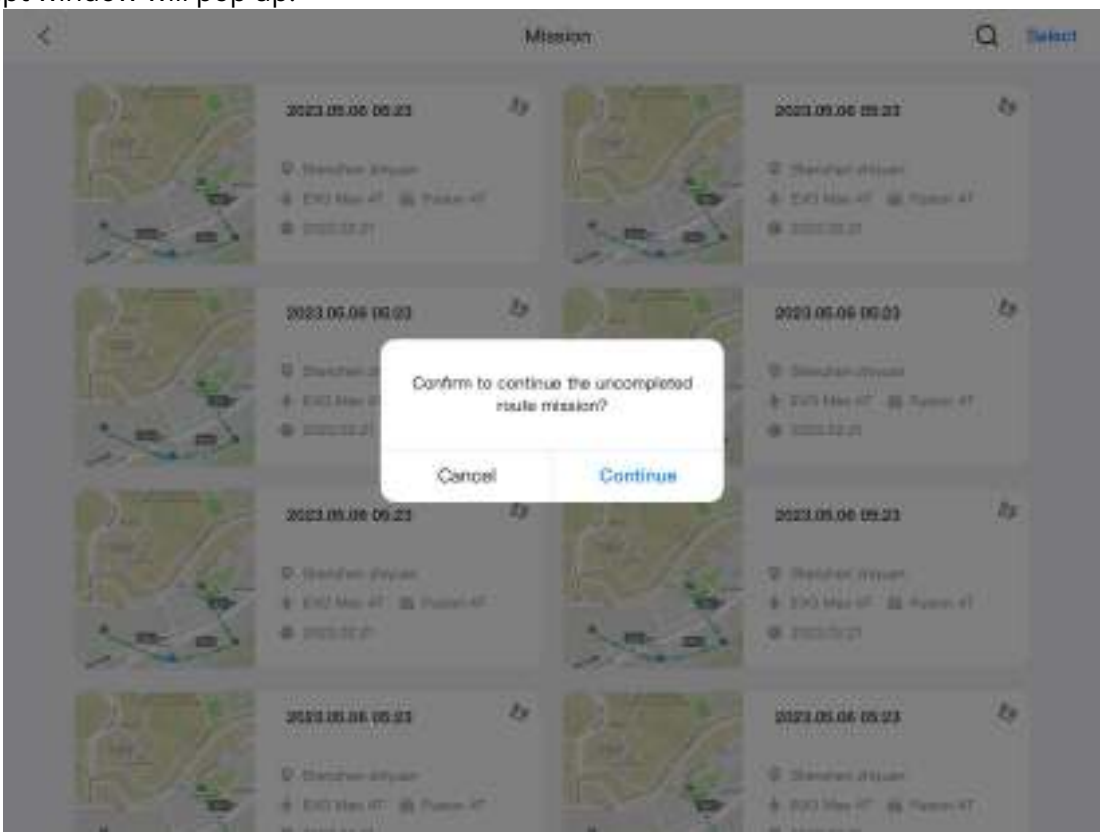

Fig 6-27 Resume Mission

■ Resume Mission Options

- Tap the "Continue" button. The position where the aircraft stopped will be displayed, and the aircraft will fly to this position to continue the last mission.
- Tap the "Cancel" button. After closing the pop-up window, the mission will no longer be executed from the last point.

6.9.6 Mission and Favorites

On the "Mission/Favorites" interface, you can query, edit, favorite, and delete previously saved flight missions.

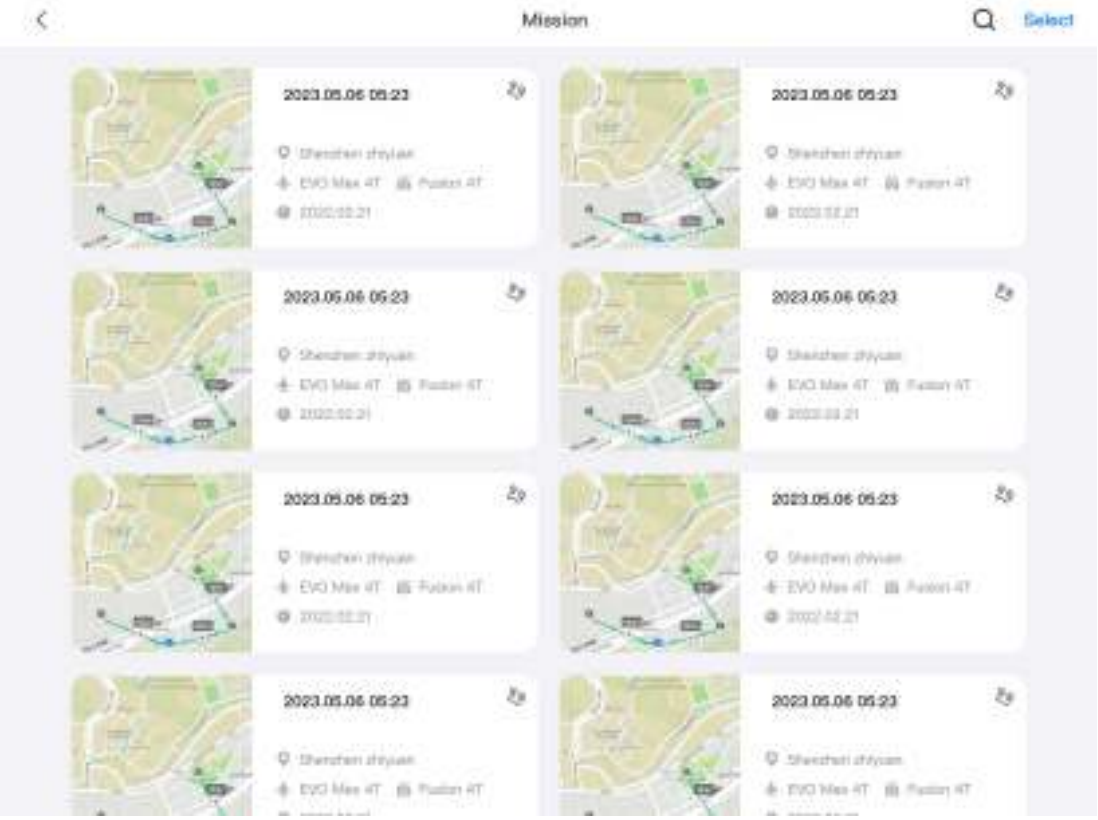

Fig 6-28 Mission/Favorites Interface

■ **Query**

Tap the "🔍" icon in the upper-right corner of the "Mission" interface and enter the desired content to quickly locate the corresponding historical flight mission.

■ **Edit**

Tap a historical flight mission on the "Mission" interface to enter the waypoint mission editing interface. Tap the "✎" icon to edit the flight mission.

■ **Favorite**

Tap the "Select" button in the upper-right corner of the "Mission" interface, then single-select, multi-select, or select all the missions to be favorited, and then tap the "☆" icon to complete the favoriting action. Favorited missions will be displayed on the "Favorites" interface for easy access.

■ **Delete**

Tap the "Select" button in the upper-right corner of the "Mission" interface, then single-select, multi-select, or select all the missions to be deleted, and then tap the "🗑" icon. After a dialog box pops up, tap the "Confirm" button. This way, the selected flight missions are deleted.

6.9.7 Personal Center

Tap the "" icon (in the shortcut toolbar or Shortcuts) to enter the "Personal Center" interface. When using the product for the first time, you need to register and log in to the Autel Enterprise App.

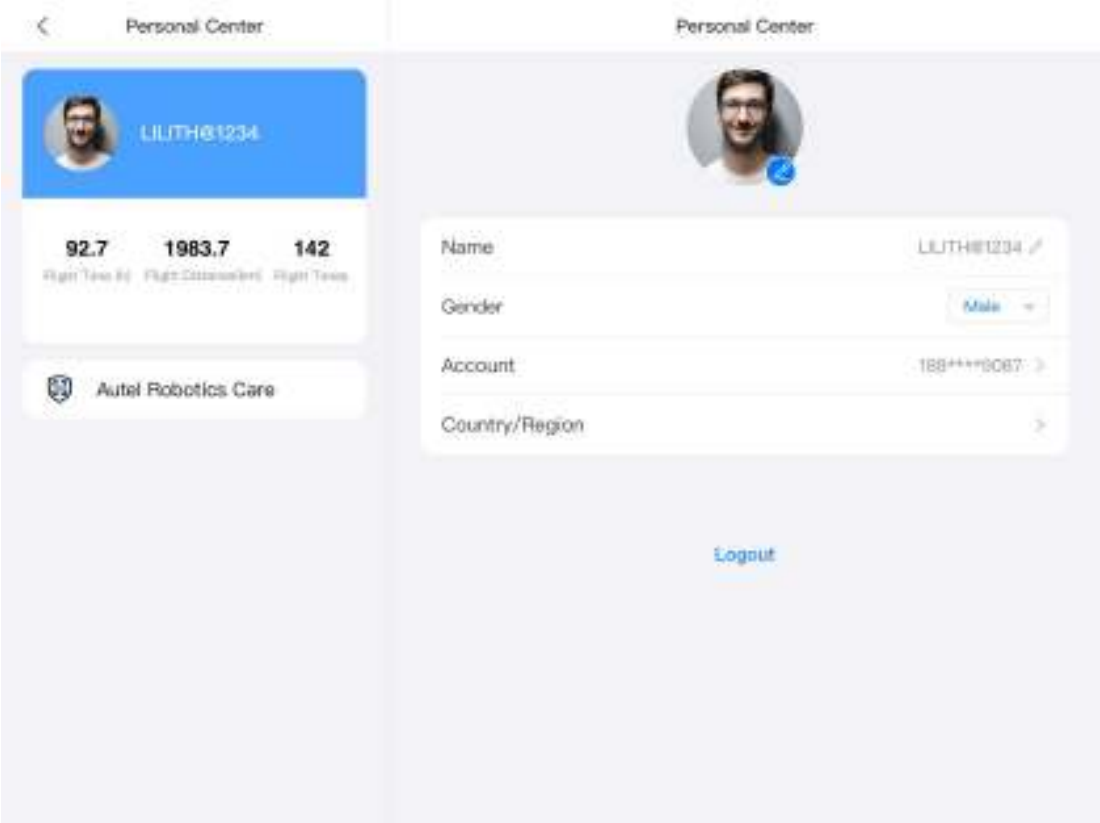

Fig 6-29 "Personal Center" Interface

On the "Personal Center" interface, you can perform the following operations:

■ Query Flight Data

On the "Personal Center" interface, you can query the flight time, flight distance, and the number of flights.

■ Purchase "Autel Robotics Care"

On the "Personal Center" interface, you can purchase the "Autel Robotics Care" value-added service for your aircraft (within 48 hours of activation).

Tip
● If you do not register and log in to the Autel Enterprise App, you cannot use cloud-related functions. ● You have the right to use a registered account, but the account ownership belongs to Autel Robotics. Please read the "User Agreement" carefully when registering.

Chapter 7 Firmware Updates and Maintenance

In order to ensure the reliability and overall performance of the aircraft and relevant parts, as well as to obtain the best flight experience, the aircraft, remote controller, and parts need to be updated to the latest firmware version.
Use the Autel Enterprise App to perform firmware updates for the aircraft, remote controller, smart battery, and other parts.

Important

- Online updates require that the remote controller can access the internet.

7.1 Aircraft and Remote Controller Firmware Updates

1. Power on the remote controller and aircraft. Make sure that the aircraft and remote controller are already paired, both have a battery level of more than 25%, and the network connection of the remote controller is normal.
2. Open the Autel Enterprise App. If there is a version update available, you will receive a pop-up notification on the main interface of the App or you can manually select the update in the settings of the App.
3. Tap "Update All", and the Autel Enterprise App will automatically download and update the firmware for the remote controller and aircraft.
4. After the update is complete, follow the pop-up instructions to restart the remote controller and aircraft.

Important

- During the update process, do not power off the aircraft and keep it connected to the remote controller.
- The update process is expected to take about 15 minutes (depending on the network that the remote controller is connected to).
- Do not move the command sticks before and after the update to ensure that the propellers remain stationary.
- Make sure that the aircraft has a micro SD card inserted and that the aircraft and remote controller have sufficient storage space for the firmware update packages.
- During the update process, the firmware of the smart battery MDX_8070_1488 will also be updated to the latest version.

7.2 Aircraft Parts Maintenance

To ensure the optimal performance of the aircraft, regular maintenance is required for the aircraft parts. For more information, see “Maintenance Manual”. If you have any questions, please contact Autel Robotics After-Sales Support.

Table 7-1 Aircraft Wearable Parts List

No.	Part	Quantity	Note
1	Propeller CW	2	Each power motor uses 2 CW or CCW propellers.
2	Propeller CCW	2	
3	Powered Motor	4	Replacement only during deep maintenance (every 900 service hours/every 3 years).
4	Front Arm Leg	2	
5	Rear Arm Leg	2	
6	Arm Connector Cover	4	
7	Battery Unlock Button	2	
8	Air Inlet Dust Filter	1	
9	Air Outlet Dust Filter	1	
10	Remote Controller Sticks	2	

Table 7-2 User-replaceable Parts List

No.	Part	Quantity	Part Number	Manufacturer
1	Propeller CW	2	EAN: 6924991125297 UPC: 889520205290	Autel Robotics
2	Propeller CCW	2		
3	Fusion 4T Gimbal*	1	EAN: 6924991122265 UPC: 889520202268	Autel Robotics
4	Fusion 4N Gimbal*	1	EAN: 6924991124238 UPC: 889520204231	Autel Robotics
5	Smart Battery	1	EAN: 6924991124412 UPC: 889520204415	Autel Robotics

Tip

- You can independently contact Autel Robotics to purchase the aforementioned parts and follow the operation instructions for replacement.
- If the part that you want to replace is not listed in the above lists, please contact Autel Robotics. Failures caused by unauthorized disassembly and reassembly will not be covered by the warranty.
- For the service life of each part, see "Maintenance Manual".

7.3 Troubleshooting Guide

Tip

- The following troubleshooting measures are only limited to failures resulting from normal usage.
- For failures resulting from abnormal usage, please contact Autel Robotics for handling.

1. The remote controller cannot power on:
   - Check whether the remote controller has sufficient power. If the battery level is too low, it may result in a power-on failure after shutdown. In this case, fully charge the remote controller and then power it on.
   - Check whether the ambient temperature is suitable, as low temperatures can affect battery output performance, resulting in a power-on failure.
   - If the remote controller was accidentally powered off during an update, it may not power on normally. In this case, contact Autel Robotics.
   - If the remote controller has not been subjected to external impacts, liquid submersion, or other destructive behaviors and does not have any conditions mentioned above, it may have a hardware failure. In such cases, contact Autel Robotics.

2. The aircraft cannot power on:
   - Check whether the smart battery has sufficient power. If the battery level is too low, it may result in a power-on failure after shutdown. In this case, fully charge the smart battery and then power the aircraft on.
   - If the smart battery has sufficient power, check whether the battery makes proper contact with the aircraft's fuselage. Dirt or rust at the battery connector can lead to poor contact and must be cleaned before being re-inserted into the battery for power-on.
   - Check whether there are any missing or damaged metal contacts at the aircraft battery connector and the smart battery connector. If yes, please contact Autel Robotics.
   - Check whether the ambient temperature is suitable, as low temperatures can affect battery output performance, resulting in a power-on failure.
   - If the aircraft or the smart battery is unexpectedly powered off during a firmware update, it may result in a power-on failure. In this case, contact Autel Robotics.
   - When none of the above conditions apply, if the aircraft can power on after the smart battery is replaced, it may be a hardware failure of the smart battery; if the aircraft still cannot power on after the smart battery is replaced, it may be a hardware failure of the aircraft itself. In this case, contact Autel Robotics.

3. The aircraft reports a fault during startup self-check:
   - Check the gimbal camera. If the gimbal camera has no response, power off the aircraft, reassemble the gimbal camera, and then perform a startup self-check again.
   - If the gimbal camera successfully passes the self-check, but the aircraft still reports a fault, it may be a hardware failure of the aircraft. In this case, contact Autel Robotics.

4. There is no response from the remote controller when pairing it with the aircraft:
   - Confirm that the distance between the aircraft and the remote controller is within 50 centimeters.
   - Check whether there is a metal object, mobile device, signal interference device, or another remote controller nearby.

5. After the aircraft powers on, the motors do not start:
   - Check whether the remote controller is paired with the aircraft.
   - Check whether the command sticks of the remote controller are functioning correctly and whether the remote controller has been correctly calibrated.
   - Check whether the aircraft's battery has sufficient power.
   - Check whether the aircraft's compass has been correctly calibrated.
   - If none of the above conditions apply, it may be a hardware failure of the aircraft itself. In this case, contact Autel Robotics.

6. After the motors start, the aircraft does not take off:
   - Check whether the aircraft is in a No-Fly Zone.
   - Check whether the aircraft is placed on a flat surface.
   - Check whether there are obstacles near the aircraft and whether the obstacle avoidance system of the aircraft is enabled.

7. The aircraft has shortened flight time:
   - During flight, factors such as low ambient temperatures, flying against the wind, air turbulence, and carrying a mount all may lead to a shortened operating time of the aircraft.
   - Make sure that the smart battery has fewer than 200 cycles. During the normal use of the smart battery, the battery capacity naturally decreases over time.

8. The remote controller has unstable image transmission (e.g., image lag, image loss, or frequent disconnection):
   - Check whether the remote controller's antennas are securely connected and whether they are adjusted to an appropriate direction.
   - Check whether there is any strong magnetic field or signal interference source near the aircraft and remote controller.
   - Confirm that the distance between the aircraft and the remote controller falls within the effective communication range and promptly reduce the flight radius if needed.

9. The gimbal camera automatically turns off during recording:
   - Do not immediately remove the microSD card from the aircraft. Instead, restart the camera and wait for the video file to be stored as much as possible.
   - Check whether the memory of the microSD card is full; if it is, replace it with a new microSD card or transfer the media files.

- Check whether the gimbal camera is securely connected to the aircraft. If the gimbal camera is not securely locked during installation, it may become loose due to flight vibrations, leading to poor contact and thus malfunctions.

10. When the aircraft is flying beyond the visual line of sight, image transmission fails:
    - Enable auto-return to let the aircraft return to the home point.

11. What precautions should I follow when using the omnidirectional visual sensing system?
    - Before flying, make sure that the visual sensing camera lens is clean and not blocked (“Omnidirectional” means that the system can sense objects in six directions, including front, rear, left, right, up, and down).
    - When flying, pay attention to the surrounding environment and safety prompt messages of the Autel Enterprise App.
    - Obstacles can be detected by checking the texture of their surfaces. The detection function cannot work properly for objects with no texture, repeated texture, a surface of pure color, moving objects, or tiny objects. It also cannot work properly in a strong light or weak light environment.

12. The accurate landing/landing protection function cannot work properly:
    - The accurate landing function can be implemented by the visual sensing lens on the rear of the aircraft. The camera detects the ground texture when the aircraft takes off or lands.
    - However, if the ground does not have any texture or the visual sensing lens on the rear of the aircraft is damaged, this function cannot work properly.

13. The omnidirectional visual sensing system cannot work properly:
    - Restart the aircraft and check whether the system can work properly this time.
    - Check whether the ambient light illuminance is suitable for the operation of the visual sensing system.

14. When recording video during flight, the image tilts:
    - Place the aircraft horizontally and keep it stationary. Use the "Gimbal Calibration" function in the Autel Enterprise App to calibrate the gimbal.
    - If the problem persists, adjust the gimbal according to the instructions described in the “Gimbal Adjustment” section.

15. The camera lens of the aircraft is dirty:
    - Gently wipe the lens with a lens cleaning cloth. It is recommended to use the lens cleaning cloth provided in the rugged case.

16. The aircraft or remote controller experiences unexpected shutdown during firmware updates:
    - Restart the device. If it can power on normally, make sure that the device is sufficiently charged before proceeding with the update.
    - If the device cannot power on, contact Autel Robotics.

17. Restore the factory setting of the remote controller:
    - Tap the "Maxitools" app on the main interface of the remote controller to perform a factory reset. Please back up important data before performing this operation.

18. Forcefully restart the remote controller after lag:
    - Press and hold the power button on the top of the remote controller for more than 6 seconds to forcefully power off the remote controller.
    - Restarting the remote controller during flight will trigger the lost action of the aircraft.

Appendix A Product Specifications

A.1 Aircraft

Aircraft	
EVO Max 4T Weight	1640 g (Smart battery, Fusion 4T Gimbal, and propellers included)
EVO Max 4T Maximum Take-Off Mass (MTOM)	1890 g
EVO Max 4N Weight	1665 g (Smart battery, Fusion 4N Gimbal, and propellers included)
EVO Max 4N Maximum Take-Off Mass (MTOM)	1890 g
Fuselage Dimensions	562×651×147 mm (unfolded, incl. propellers) 318×400×147 mm (unfolded, excl. propellers) 257×145×131 mm (folded, excl. propellers)
Diagonal Wheelbase	Diagonal: 466 mm
Propeller Dimension	11inches
Propeller weight	10 g
Maximum Propeller Rotational Speed	8000 RPM
Maximum Ascent Speed	Slow: 3 m/s Smooth: 5 m/s Standard: 6 m/s Ludicrous: 8 m/s
Maximum Descent Speed	Slow: 3 m/s Smooth: 5 m/s Standard: 6 m/s Ludicrous: 6 m/s
Maximum Horizontal Flight Speed (Windless Near Sea Level)	Slow: 3 m/s Smooth: 10 m/s Standard: 15 m/s (forward & backward), 10 m/s (sidewards) Ludicrous: 23 m/s (forward), 18 m/s (backward), 20 m/s (sidewards)

Max Service Ceiling Above Sea Level	4000 meters
Maximum Flight Altitude	800 meters (Altitude limit in the App)
Maximum Flight Time (Windless)	42 minutes
Maximum Range	25 km
Maximum Hovering Time (Windless)	38 minutes
Maximum Wind Resistance (Take-off and Landing)	12 m/s
Maximum Tilt Angle	Slow: 10° Smooth: 30° Standard: 30° Ludicrous: 36°
Maximum Angular Velocity	Pitch axis: 300°/s Heading axis: 120°/s
Operating Temperature	-20°C to 50°C
Hot-swappable Batteries	Supported
IP Rating	IP43* (Custom service)
Internal Storage	128GB internal storage, with 64GB of available space* (Remaining available space will vary with different firmware versions)
Strobe	Integrated
Mid-flight Sensing	ADS-B receiver. UAT and 1090ES are supported.
GNSS	GPS+Galileo+BeiDou+GLONASS
Hovering Accuracy	Vertically ±0.1 m (when visual positioning works normally) ±0.5 m (when GNSS works normally) Horizontally ±0.3 m (when visual positioning works normally) ±0.5 m (when GNSS works normally)
Wi-Fi Protocol	802.11a/b/g/n/ac/ax Supports 2×2 MIMO Wi-Fi

Wi-Fi Operating Frequency	2.400 - 2.4835 GHz 5.150 - 5.250 GHz (CE/FCC/UKCA) 5.725 - 5.850 GHz (excluding MIC)
Wi-Fi Effective Isotropic Radiated Power (EIRP)	2.400 - 2.4835 GHz FCC: <24dBm; CE/SRRC/MIC: <20dBm 5.150 - 5.250 GHz FCC/CE/UKCA: <22dBm 5.725 - 5.850 GHz FCC/SRRC: <21dBm, CE: <14dBm
Image Transmission	
Operating Frequency	902 -928MHz*/2.400 – 2.4835GHz/5.15 - 5.25GHz* 5.17-5.25GHz**/5.65 – 5.755GHz***/5.725 - 5.850GHz * Only applicable to FCC regions. ** Only applicable to CE, UKCA regions. *** Only applicable to MIC regions.
Maximum Transmission Distance (Without Interference and Blocking)	FCC: 20km CE: 8km
Effective Isotropic Radiated Power (EIRP)	902-928 MHz: <30dBm (FCC) 2.400 – 2.4835GHz: <30dBm (FCC), <20dBm (CE/SRRC/MIC) 5.15-5.25 GHz: <23dBm (FCC) 5.17-5.25 GHz: <23dBm (CE) 5.65-5.755 GHz: <27dBm (MIC) 5.725 - 5.850GHz : <27dBm (FCC/SRRC), <14dBm (CE)
Visual Sensing System	
Sensing Range	Forward: 0.5 - 31 m Backward: 0.5 - 25 m Sidewards: 0.5 - 26 m Upward: 0.2 - 26 m Downward: 0.3 - 23 m
FOV	Forward & Backward: 60°(H), 80°(V) Upward: 180° (sidewards), 120° (forward & backward)

	Downward: 180° (sidewards), 120° (forward & backward)
Operating Environment	Forward, backward, sidewards, and upward: The surface has rich textures, under a sufficient lighting environment (>15 lux, normal indoor fluorescent lighting environment). Downwards: The surface is a diffuse material with a reflectivity >20% (walls, trees, humans, etc.), under a sufficient lighting environment (>15 lux, normal indoor fluorescent lighting environment).
Millimeter-wave Radar Sensing System	
Operating Frequency	60 - 64 GHz*/24.0 - 24.25 GHz
Effective Isotropic Radiated Power (EIRP)	60 - 64GHz: <20dBm (CE/FCC), <13dBm (MIC) 24.0 - 24.25GHz: <20dBm (KC)
Sensing Range	60 - 64 GHz radar: Upward: 0.3 - 20 m Downward: 0.15 - 80 m Forward & Backward: 0.3 - 50 m 24 - 24.25GHz radar: Downward: 0.8 - 12 m
FOV	Horizontal (6dB): ±60°/±22° (60 GHz/24 GHz) Vertical (6dB): ±30°/±20° (60 GHz/24 GHz)
Operating Environment	60 GHz millimeter-wave radar sensing system: Supports all-weather obstacle avoidance for glass, water, wires, buildings, and trees in 4 directions. Its obstacle avoidance distance varies with the obstacle's ability to reflect electromagnetic waves and its surface size. 24 GHz millimeter-wave radar sensing system: Supports downward sensing, and its sensing range varies by the ground material. For example, the sensing range of cement ground is 12 meters, and the sensing range of grass with a thickness of more than 3 cm is less than 6 meters.
Aircraft Version Limitations*	To comply with (national) regional regulations, certain aircraft versions use a 24 GHz millimeter-wave radar in the downward direction and use 60 GHz radars in the forward, backward, and upward directions. In the 24 GHz aircraft version, the 60GHz radars in the forward, backward, and upward directions are disabled in the

	flight software at the factory, and only the 24GHz radar in the downward direction is enabled to assist in landing. The 24 GHz aircraft version only supports visual obstacle avoidance under good lighting conditions and does not support millimeter-wave radar obstacle avoidance at night.

Radar and Visual Sensing Systems	
Sensing Range	Forward & Backward: 0.3 - 50 m Sidewards: 0.5 - 26 m Upward: 0.2 - 26 m Downward: 0.15 - 80 m (60GHz radar)
FOV	Forward & Backward: 120°(H), 80°(V) Upward: 180° (sidewards), 120° (forward & backward) Downward: 180° (sidewards), 120° (forward & backward)
Operating Environment	Forward, backward, upward, and downward: Supports all-weather obstacle avoidance for various conditions, including water, forests, buildings and high voltage lines. At least one of the two conditions should be met: sufficient lighting or the obstacle has a strong reflection ability to electromagnetic waves. Sidewards: The surface has rich textures, under a sufficient lighting environment (>15 lux, normal indoor fluorescent lighting environment).

A.2 Gimbal Camera

A.2.1 Fusion 4T (EVO Max 4T)

Zoom Camera	
Image Sensor	1/2" CMOS. Effective pixels: 48M
Lens	Focal length: 11.8 - 43.3 mm 35 mm equivalent focal length: 64 - 234 mm Aperture: f/2.8 - f/4.8 Focusing distance: 5 m ~ ∞
ISO Range	Normal mode Auto: ISO100 - ISO12800 Manual Photo: ISO100 - ISO6400

	Video: ISO100 - ISO12800
Shutter Speed	Photo: 0.5s ~ 1/8000s Video: 1/30s ~ 1/8000s
Digital Zoom	2.7 - 10x continuous optical zoom, 160x hybrid zoom
Max Photo Resolution	4000×3000
Photo Format	JPG
Photo Taking Mode	Auto
Video Resolution	4000×3000 30P
Video Format	MP4
Max Bit Rate	70Mbps
Supported File Systems	exFAT/Fat32
Wide Angle Camera	
Image Sensor	1/1.28" CMOS. Effective pixels: 50M
Lens	DFOV: 85° Focal length: 4.5 mm Equivalent focal length: 23 mm Aperture: f/1.9 AF motor: 8-line SMA, PDAF focusing Focusing distance: 1 m ~ ∞
ISO Range	Auto: Photo: ISO100 - ISO6400 Video: ISO100 - ISO64000* * Night mode: up to ISO64000 Manual: Photo: ISO100 - ISO12800 Video: ISO100 - ISO6400
Shutter Speed	Photo: 0.5s ~ 1/8000s Video: 1/30s ~ 1/8000s
Photo Size	4000×3000
Photo Format	JPG
Photo Taking Mode	Auto
Video Resolution	4000×3000 30P

Video Format	MP4
Max Bit Rate	70Mbps
Supported File Systems	exFAT/Fat32
Infrared Thermal Imaging Camera	
Image Sensor	Uncooled VOx Microbolometer
Lens	FOV: 42° Focal length: 13 mm Aperture: f/1.2 Focusing distance: 6 m ~ ∞
Sensitivity	≤50mK@f/1.0, 25°C
Pixel Pitch	12um
Wavelength	8 - 14um
Radiometric Measurement Method	Center measurement/Pot measurement/Rectangular measurement
Radiometric Temperature Range	-20°C to 150°C (high gain mode); 0 to 550°C (low gain mode)
Radiometric Measurement Accuracy	±3°C or reading ±3% (using the larger value) @ ambient temperature ranges from -20°C to 60°C
Accurate Temperature Measurement Distance	1 ~ 25 m
Digital Zoom	16x digital zoom
Temperature Alert	High and low temperature alarm thresholds, Reporting coordinates and temperature values
Palette	White Hot/Black Hot/Searing/ Rainbow/Grey/Ironbow/Cold and Hot
Photo Size	640×512
Photo Format	JPG (the images contain temperature information and are parsed by dedicated SDK and PC tools)
Photo Taking Mode	Auto
Video Resolution	640×512@25FPS
Video Format	MP4

Laser Rangefinder	
Wavelength	905 nm
Measurement Accuracy	± (1 m + D×0.15%) where D is the distance to a vertical reflecting plane
Measuring Range	5 - 1200 m
Gimbal	
Mechanical Range	Pitch: -135° to 45° Roll: -45° to 45° Yaw: -45° to 45°
Controllable Range	Pitch: -90° to 30°
Stability System	3-axis mechanical gimbal (pitch, roll, yaw)
Max Control Speed (Pitch)	100°/s
Angular Vibration Range	<0.005°

A.2.2 Fusion 4N (EVO Max 4N)

Night Vision Camera	
Image Sensor	2.3M effective pixels
Lens	FOV: 52° 35 mm equivalent focal length: 41.4 mm Zoom range: 1 ~ 8x. Linked zoom is supported.
Pixel Pitch	12um
ISO Range	Auto/Manual mode: ISO100 - ISO450000 Night vision mode: Auto: ISO100 - ISO450000
Photo Size	1920×1200
Photo Format	JPG
Shooting Mode	Single shot (default). Long press for burst shot
Video Format	MP4

Video Encoding	H.264, H.265 (default)
Video Bit Rate	20Mbps (1920×1200 P30)
HDR Video	Auto
Video Resolution	Night vision mode: 1920×1200 P30
Supported File Systems	exFAT

Wide Angle Camera	
Image Sensor	1/1.28" CMOS. Effective pixels: 50M
Lens	DFOV: 85° Focal length: 4.5 mm Equivalent focal length: 23 mm Aperture: f/1.9 AF motor: 8-line SMA, PDAF focusing Focusing distance: 1 m ~ ∞
ISO Range	Auto: Photo: ISO100 - ISO6400 Video: ISO100 - ISO64000* * Night mode: up to ISO64000 Manual: Photo: ISO100 - ISO12800 Video: ISO100 - ISO6400
Shutter Speed	Photo: 0.5s ~ 1/8000s Video: 1/30s ~ 1/8000s
Photo Size	4000×3000
Photo Format	JPG
Photo Taking Mode	Auto
Video Resolution	4000×3000 30P
Video Format	MP4
Max Bit Rate	70Mbps
Supported File Systems	exFAT/Fat32
Infrared Thermal Imaging Camera	
Image Sensor	Uncooled VOx Microbolometer

Lens	FOV: 61° Focal length: 9.1 mm Aperture: f/1.0 Focusing distance: 2.2 m ~ ∞
Sensitivity	≤50mK@f/1.0, 25°C
Pixel Pitch	12um
Wavelength	8-14um
Radiometric Measurement Method	Center measurement/Pot measurement/Rectangular measurement
Radiometric Temperature Range	-20°C to 150°C (high gain mode); 0 to 550°C (low gain mode)
Radiometric Measurement Accuracy	±3°C or reading ±3% (using the larger value) @ ambient temperature ranges from -20°C to 60°C
Accurate Temperature Measurement Distance	1 ~ 25 m
Digital Zoom	8x digital zoom
Temperature Alert	High and low temperature alarm thresholds, Reporting coordinates and temperature values
Palette	White Hot/Black Hot/Searing/ Rainbow/Grey/Ironbow/Cold and Hot
Photo Size	640×512
Photo Format	JPG (the images contain temperature information and are parsed by dedicated SDK and PC tools)
Photo Taking Mode	Auto
Video Resolution	640×512 @30FPS
Video Format	MP4
Laser Rangefinder	
Wavelength	905 nm
Measurement Accuracy	± (1 m + D×0.15%) where D is the distance to a vertical reflecting plane
Measuring Range	5 - 1200 m

Gimbal	
Mechanical Range	Pitch: -135° to 45° Roll: -50° to 50° Yaw: -45° to 45°
Controllable Range	Pitch: -90° to 30°
Stability System	3-axis mechanical gimbal (pitch, roll, yaw)
Max Control Speed (Pitch)	100°/s
Angular Vibration Range	<0.005°

A.3 Remote Controller

Autel Smart Controller V3	
Material	PC+ABS
Dimensions	269×189×66 mm (antennas folded) 269×302×87 mm (antennas unfolded)
Weight	1194 g (protective case excluded) 1365 g (protective case included)
Operating Temperature	-20°C to 40°C
Storage Temperature	+15°C ~ +25°C (within a year) 0°C ~ +30°C (within three months) -20°C ~ +45°C (within a month)
Protection Rating	IP43
Internal Storage	128GB
microSD Extension	Not supported
Operating System	Based on Android 11
Application Installation	Supports the installation of third-party Android apps
Video Performance	4K@24FPS H.264/H.265 video smooth play
HDMI	Outputs up to 1080P@60FPS video
USB-C	Charging: supports PD/QC fast charging, up to 65W Data: USB3.1 Gen2

USB-A	Charging: 5V/2A Data: USB2.0
GNSS	GPS+Galileo+BeiDou+GLONASS
Wi-Fi Protocol	802.11a/b/g/n/ac Supports 2×2 MIMO Wi-Fi
Wi-Fi Operating Frequency	2.400 - 2.4835 GHz 5.725 - 5.850 GHz
Wi-Fi Effective Isotropic Radiated Power (EIRP)	2.400 - 2.4835 GHz: ≤24dBm (FCC); ≤20dBm (CE/SRRC) 5.725 - 5.850 GHz: ≤22dBm (FCC/SRRC); ≤14dBm (CE)
Bluetooth	Bluetooth 5.0
Bluetooth Operating Frequency	2.400 - 2.4835 GHz
Bluetooth Effective Isotropic Radiated Power (EIRP)	≤11dBm
Image Transmission	
Antenna	Dual antennas, 1T2R, detachable design
Operating Frequency	902 - 928 MHz* * Only applicable to FCC regions. 2.400 - 2.4835 GHz 5.725 - 5.850 GHz
Effective Isotropic Radiated Power (EIRP)	902 - 928 MHz: ≤28dBm 2.400 - 2.4835 GHz: ≤28dBm (FCC); ≤20dBm (CE/SRRC) 5.725 - 5.850 GHz: ≤28dBm (SRRC/FCC); ≤14dBm (CE)
Maximum Transmission Distance (Without Interference and Blocking)	FCC: 15 km CE/SRRC: 8 km
Display	
Type	TFT LCD
Dimensions	7.9 inches

Maximum Brightness	2000 nits
Resolution	2048×1536
Refresh Rate	60Hz
Touch Control	Supports 10-point touch
Battery	
Battery Type	Li-Po 3S
Rated Capacity	5800 mAh
Voltage	11.55V
Battery Energy	67 Wh
Charging Time	About 120 minutes
Battery Endurance	2.5 hours (Max brightness) 4.0 hours (50% brightness)
Battery Replacement	Not supported

A.4 Smart Battery

Smart Battery MDX_8070_1488	
Battery Dimension	158.4×74.3×50.7 mm
Operating Temperature	-20°C to 50°C
Battery Type	LiPo 4S
Rated Capacity	8070mAh
Battery Energy	120Wh
Voltage	14.88V
Charging Voltage Limit	17.0V
Rated Charging Power	120W
Maximum Charging Power	247W
Weight	520 g
Battery Charge	+5°C ~ +45°C*

Temperature	(When the battery temperature is below +5°C, the battery stops charging and activates self-heating. When the battery temperature is above +45°C, the battery stops charging.)
Battery Storage	
Ideal Storage Temperature	+22°C ~ +28°C
Storage Temperature & Humidity	-10°C ~ +30°C, 65±20%RH
Battery Charger MDX120W	
Power Input	100-240V~ 50/60Hz, 3.0A
Output Port	Battery charging interface/ USB-C
Battery Charging Interface	17V⎓7.06A
USB-C Charging Interface	5.0V⎓3.0A, 9.0V⎓3.0A, 12.0V⎓2.5A
Total Power Output	120.0W Max

Appendix B Declaration of Conformity

Declaration of Conformity

Product: EVO Max 4T, EVO Max 4N
Model Number: MDX
Manufacturer's Name: *Autel Robotics Co., Ltd.*
Manufacturer's Address: *601,701,801,901, Block B1, Nanshan iPark, No. 1001 Xueyuan Avenue, Nanshan District, Shenzhen, Guangdong, 518055, China*

We, *Autel Robotics Co., Ltd.*, declare under our sole responsibility that the above referenced product is in conformity with the applicable requirements of the following directives:

RED Directive: 2014/53/EU
RoHS Recast Directive: 2011/65/EU
UAS Delegated Regulation: 2019/945/EU 2020/1058/EU
Machinery Directive: Annex I 2006/42/CE

Conformity with these directives has been assessed for this product by demonstrating compliance to the following harmonized standards and/or regulations:

Safety	EN IEC 62368-1:2020+A11:2020
EMC	ETSI EN 301 489-1 V2.2.3 (2019-11) ETSI EN 301 489-3 V2.3.2 (2023-01) ETSI EN 301 489-17 V3.2.4 (2020-09) ETSI EN 301 489-19 V2.2.1 (2022-09) EN 55032:2015+A11:2020+A1:2020 EN 55035:2017+A11:2020 EN IEC 61000-3-2:2019+A1:2021 EN 61000-3-3:2013+A1:2019+A2:2021
Radio	ETSI EN 300 328 V2.2.2 (2019-07) ETSI EN 301 893 V2.1.1 (2017-05) ETSI EN 300 440 V2.2.1 (2018-07) ETSI EN 303 413 V1.2.1 (2021-04) ETSI EN 303 213-5-1 V1.1.1 (2020-03) ETSI EN 305 550-1 V1.2.1 (2014-10) ETSI EN 305 550-2 V1.2.1 (2014-10)
Health	EN IEC 62311:2020 EN 50665:2017
RoHS	2011/65/EU
UAS Delegated Regulation	prEN 4709-001: 03.2023 with D5 WG8 prEN 4709-002: 02.2023 with Edition P 1, February 2023

	prEN 4709-003: 02.2023 with Edition P 1, February 2023 prEN 4709-004: 02.2023 with Edition P 1, February 2023
Machinery Directive	EN ISO 12100

The notified body, *Bay Area Compliance Labs Corp*, notified body number: 1313, performed the EU-type examination in according with Annex III, Module B of Council Directive 2014/53/EU, and issued the EU-type examination certificate: B2302226.

The notified body, *LGAI Technological Center S.A./Applus*, notified body number: 0370, performed the EU-type examination in according with Annex III, Module B of Regulation (EU) 945/2019, and issued the EU-type examination certificate: 0370-UAS-0008.

Signed for and on behalf of: *Autel Robotics Co., Ltd.*
Place: Shenzhen, China Date: 2024-01-13
Name: Cheng Zhuanpeng Position: Legal Representative

Signature: Cheng Zhuanpeng

Appendix I

Product Mix. Description	Model	SW version	Description	Serial Number
EVO Max 4T	MDX	V1.7.0.97	Quad copter equipped with a 4T Gimbal	1748FEV3HMA923XXXXXX
EVO Max 4N	MDX	V1.7.0.97	Quad copter equipped with a 4N Gimbal	1748FEV3HMA923XXXXXX
Battery	MDX_8070_1488	/	Drone Battery	1748CBE46232515XX
Remote Controller	EF9-3	V1.6.0.87	Drone Remote Controller	TH79232XXXXXX
Adapter	MDX120W	/	Drone Adapter	/

*Note: Updated software will be released by manufacturer to fix bugs and improve the performance after the product placed on the market. All updated versions released by the manufacturer have been verified to be complied with the applicable regulations. All RF parameters (e.g., RF power, frequency) are not accessible to end users and cannot be changed by any third parties. Conformity of the product with EU

requirements is ensured by evaluating the GNSS signals. The radio parameters are automatically set according to the detected region, the user does not have the capability to change these settings.

The guaranteed sound power level for this UAS equipment is 87 dB(A).
The object of the declaration described above is of class 2.

To download DoC, please visit: https://www.autelrobotics.com/doc/591/.